Force 2

Electrosurgical
Generator

Service
Manual

Valleylab

FORCE 2

Service Manual

Equipment covered in this manual: F2–20 PC MIL
Electrosurgical Apparatus
115/220 VAC Nominal, 50/60 Hz
National Stock Number (NSN): 6515–01–309–6647

Valleylab Inc.

5920 Longbow Drive, P.O. Box 9015

Boulder, Colorado 80301 USA

For service information call: 1–800–225–8522 / 1–303–530–2300 / TWX 910–940–2514

FOREWORD

The following service instructions are for use only by qualified personnel to repair and service the equipment described in this manual.

Follow the instructions in this manual for proper use of the Electrosurgical Apparatus. Do not tamper with any components, or modify the configuration of any item supplied with the Electrosurgical Apparatus.

Caution: Federal (USA) law restricts this device to sale by or on the order of a physician.

Valleylab, its dealers and representatives reserve the right to make changes in equipment built and/or sold by them at any time without incurring any obligation to make the same or similar changes on equipment previously built and/or sold by them.

Effective Date: February, 1990

Valleylab Part No.: 945 100 117 A

The Electrosurgical Apparatus is capable of utilizing 115VAC (nominal) or 220VAC (nominal) line input voltage.

NOTE: THE ELECTROSURGICAL APPARATUS IS CONFIGURED BY VALLEYLAB WITH THE INPUT POWER SOURCE SWITCH IN THE 115VAC POSITION AND WITH THE PROPER 115VAC HOSPITAL GRADE POWER CORD.

UTILIZATION OF THE 220VAC (NOMINAL) INPUT LINE VOLTAGE REQUIRES THAT THE INPUT POWER SOURCE SWITCH BE IN THE 220VAC POSITION AND THAT THE PROPER 220VAC HOSPITAL GRADE POWER CORD BE INSTALLED ON THE ELECTROSURGICAL APPARATUS.

Contact a Valleylab Service Center for assistance in configuring the power cord for your application.

Copyright © Valleylab, Inc., 1990

All rights reserved. Contents of this publication may not be reproduced in any form without the written permission of Valleylab, Inc.

Service Centers

Valleylab, Inc.
Boulder, Colorado, USA
800–255–8522

Valleylab Australia
Prospect, AUSTRALIA
61–2–688–4888

Valleylab Benelux
Nienwegein, HOLLAND
31–3402–32456

Valleylab France
c/o CLIMO
Lyon, FRANCE
33–78–096241

Valleylab Germany
Hamburg, WEST GERMANY
49–40550–2003/4/5

Valleylab UK
London, ENGLAND
44–1–993–7808

Table of Contents

SECTION 1
GENERAL DESCRIPTION OF THE CLINICAL USE **1**

SECTION 2
PACKAGING **2**
DESCRIPTION 2
COMPONENTS 2
UNPACKING INSTRUCTIONS 2
PACKING INSTRUCTIONS 2

SECTION 3
INSTALLATION **5**
EQUIPMENT ITEMS 5
GENERAL SET UP 6
ENVIRONMENT 6
POWER REQUIREMENTS 6
POWER PLUG 6
PROPER GROUNDING 7
PREOPERATIONAL CHECKOUT 7
INITIAL ADJUSTMENTS 7
CLEANING INSTRUCTIONS 7

SECTION 4
ELECTROSURGICAL WARNINGS AND PRECAUTIONS **8**
GENERAL PRECAUTIONS 8
ELECTROSURGICAL GENERATOR 9
ACTIVE ACCESSORIES, DISPOSABLES, PATIENT RETURN ELECTRODES 10

SECTION 5
DESCRIPTION OF CONTROLS, INDICATORS, AND RECEPTACLES **12**
CONTROLS 14
INDICATORS 15
ALERTS 16
RECEPTACLES 17
REAR PANEL FUNCTIONS 18

SECTION 6
SET UP INSTRUCTIONS FOR GENERAL USE **20**
POWER–UP SELF TEST 20
SELECTING MODES AND POWER LEVELS FROM LEFT TO RIGHT 22
PATIENT RETURN ELECTRODE APPLICATION 22
TYPICAL POWER SETTINGS FOR VARIOUS SURGICAL PROCEDURES 22

POWER OFF 23
ACCESSORY CONNECTIONS TO THE GENERATOR . 24

SECTION 7
GENERAL ELECTROSURGERY 29
KEYING/ACTIVATION SYSTEMS 29
FOOTSWITCHES 29
HANDSWITCHING FORCEPS AND PENCILS 29
USE OF MULTIPLE ACTIVE ELECTRODES 29

SECTION 8
TECHNICAL SPECIFICATIONS 31
OUTPUT WAVEFORM 31
OUTPUT CHARACTERISTICS 31
LOW FREQUENCY LEAKAGE (50/60 HZ) 31
HIGH FREQUENCY RISK PARAMETERS 31
REM™ CONTACT QUALITY MONITOR 32
INPUT POWER SOURCE 32
POWER CORD LENGTH 32
AUDIO VOLUME 32
DISPLAYS/CONTROLS 32
WEIGHT 32
SIZE 32

SECTION 9
FUNCTIONAL DESCRIPTIONS 37
OPERATIONAL DESCRIPTION/BLOCK DIAGRAM 37
CIRCUIT DESCRIPTIONS 40

SECTION 10
TESTING AND CALIBRATION 46
RECOMMENDED TEST EQUIPMENT 46
PREVENTATIVE MAINTENANCE 46
PRETEST INSPECTION 47
POWER–UP SELF TEST 48
MONOPOLAR OUTPUT POWER TEST 49
BIPOLAR OUTPUT POWER TEST 50
REM™ CONTACT QUALITY MONITORING SYSTEM TEST 50
LINE FREQUENCY (50/60 Hz) CURRENT LEAKAGE TEST 51
CHASSIS GROUND INTEGRITY TEST 52
CALIBRATION 52

SECTION 11
TROUBLESHOOTING 60
INTERCONNECT LISTING 71

SECTION 12
DISASSEMBLY FOR SERVICE AND COMPONENT REPLACEMENT 73
CONTROL PANEL ASSEMBLY REMOVAL 75
MONOPOLAR DISPLAY/CONTROL PCBA REMOVAL AND REPLACEMENT 75
BIPOLAR DISPLAY PCBA REMOVAL AND REPLACEMENT 75
INTERFACE PCBA REMOVAL AND REPLACEMENT 77
RF POWER SUPPLY PCBA REMOVAL AND REPLACEMENT 77
ELECTRONIC COMPONENT INSTALLATION AND MOUNTING 78

SECTION 13
ASSEMBLIES AND SCHEMATICS 80

SECTION 14
PARTS LIST 99
PCB ASSEMBLY, MONOPOLAR DISPLAY 99
PCB ASSEMBLY, BIPOLAR DISPLAY 101
PCB ASSEMBLY, INTERFACE 101
PCB ASSEMBLY, POWER SUPPLY 103
HEATSINK ASSY, RF OUT 105
HEATSINK ASSY, CLAMP 105
HEATSINK ASSY, P.S. 105
HEATSINK ASSY, LVPS 106

SECTION 15
LIMITED WARRANTY 107

List of Figures

Figure 2.1	Packing Configuration	3
Figure 2.2	Generator/Cart Assembly	4
Figure 2.3	Accessories Packing	4
Figure 5.1	Front View	12
Figure 5.2	Rear View	13
Figure 8.1	Typical Output Power vs Load – Monopolar Cut Modes	33
Figure 8.2	Typical Output Power vs Load – Coag Modes	35
Figure 8.3	Typical Output Power vs Load – Bipolar	36
Figure 9.1	Functional Block Diagram	39
Figure 10.1	Monopolar Output Test Circuit	49
Figure 10.2	Bipolar Output Test Circuit	50
Figure 10.3	REM™ Test Circuit	50
Figure 10.4	50/60 Hz Leakage Test Circuit	51
Figure 10.5	Monopolar Output Waveforms	55
Figure 10.6	Output FET Voltage and Current	57
Figure 10.7	RF Output FET Gate Drive Waveforms at Q18 and Q19 Drains	58
Figure 10.8	Power Supply and RF Current Limit Waveforms	59
Figure 11.1	Power Up Self Test Failure	62
Figure 11.2	Monopolar Output Failure	63
Figure 11.3	Monopolar Footswitching Failure	66
Figure 11.4	Monopolar Handswitching Failure	67
Figure 11.5	Bipolar Footswitching/Forceps Failure	68
Figure 11.6	No or Constant REM™ Alarm	69

Figure 12.1 Major Component Locations 74

Figure 13.1 Cable/Wiring Diagram 80

Figure 13.2 System Interconnect Diagram 82

Figure 13.3 Monopolar Display/Control Board 83

Figure 13.4 Monopolar Display/Control Board Schematic 84

Figure 13.5 Bipolar Display Board 86

Figure 13.6 Bipolar Display Board Schematic 87

Figure 13.7 Interface Board 88

Figure 13.8 Interface Board Schematic 89

Figure 13.9 Power Supply–RF Output Board 90

Figure 13.10 Power Supply–RF Output Board Schematic 91

Figure 13.11 Heatsink Assy, RF Out 93

Figure 13.12 Heatsink Assy, Clamp 93

Figure 13.13 Heatsink Assy, Power Supply 94

Figure 13.14 Heatsink Assy, LVPS 94

Figure 13.15 Monopolar Keyboard Schematic 95

Figure 13.16 Bipolar Keyboard Schematic 96

Figure 13.17 Monopolar Footswitch Connector Schematic 97

Figure 13.18 Bipolar Footswitch Connector Schematic . . 97

Figure 13.19 Monopolar Handswitch Schematic 98

Figure 13.20 Bipolar Handswitch Schematic 98

SECTION 1
GENERAL DESCRIPTION OF THE CLINICAL USE

Scope

This Service Manual contains information required to troubleshoot, maintain, and install the Force 2 Electrosurgical Generator. Instructions for the operation of the Force 2 Electrosurgical Generator are beyond the scope of this manual. The reader is directed to the Force 2 Instruction Manual supplied with the generator.

Introduction

The Force 2 Electrosurgical Generator described in this manual is designed to provide the three most significant electrosurgical effects: cutting, desiccation, and fulguration. Solid state design provides both Monopolar and Bipolar outputs.

The Monopolar outputs are designed with the capability of delivering smooth cutting, cutting with increasing degrees of hemostasis, and fulguration with a minimum of cutting. The Bipolar output is intended for desiccation without fulguration.

SECTION 2
PACKAGING

DESCRIPTION

The Force 2 Electrosurgical Apparatus is made up of several different components. The components of the kit are packaged into intermediate and unit containers. The containers are assembled and packed into an exterior box to form a single unit.

COMPONENTS

The components of the kit are categorized into major groups to aid personnel in re–packing:

Electrosurgical Generator
Mobile Cart
Footswitches
Electrosurgical Accessories

UNPACKING INSTRUCTIONS

Refer to Figure 2.1 for container designators.

Refer to the Basic Packaging list in the Section EQUIPMENT ITEMS for item numbers of the kit components.

a) Open the exterior shipping container (A) from the top and remove the individually packed containers.

b) Pull the generator cart (item 2) and the generator (item 1) from the unit containers (C and B).

c) Assemble the generator cart by installing the four casters to the bottom plate. Slots are provided on each corner for the casters. Install the generator on the cart (Fig. 2.2). (Refer to the Appendix of the Force 2 Instruction Manual for complete assembly and mounting instructions.)

d) Remove accessory items from intermediate and unit containers as required. Space is provided in the cart for many of the accessories to be stored.

PACKING INSTRUCTIONS

a) Remove all loose kit items from the generator cart and pack into the intermediate containers (Figure 2.3).

b) Place all unit items into their designated containers and re–tape the flaps.

c) Place all unit containers and intermediate packs into the exterior pack. Refer to Figure 2.1 for the loading configuration of the individual boxes into the exterior shipping container.

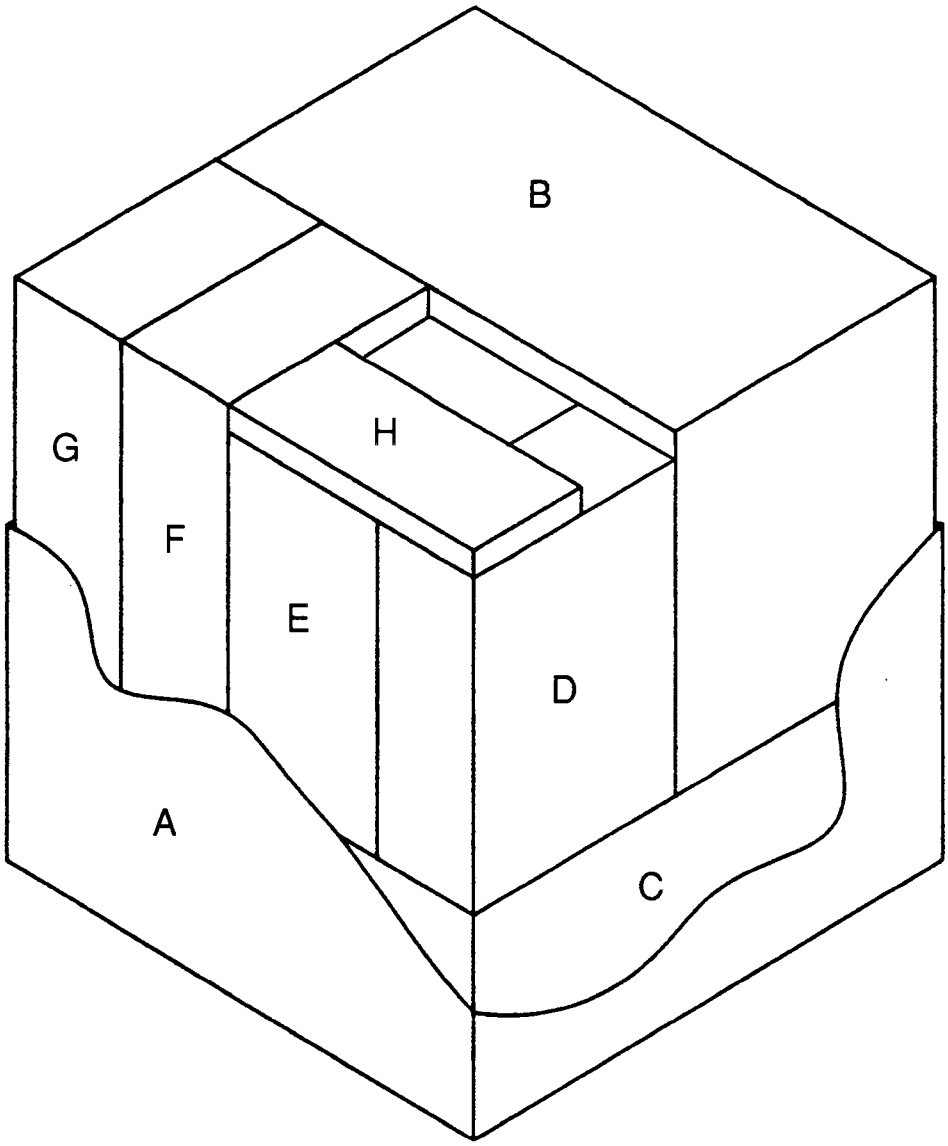

CONTAINER DESIGNATOR	ITEM	DESCRIPTION	PACK TYPE
A	COMPLETE KIT	F2-20 PC MIL ELECTROSURGICAL APPARATUS	EXTERIOR
B	1	ELECTROSURGICAL GENERATOR	UNIT
C	2	MOBILE CART	UNIT
D	8,9,10,11,12,13,16,17	ACCESSORIES	INTERMEDIATE
E	5,7,14,15	ACCESSORIES	INTERMEDIATE
F	3	MONOPOLAR FOOTSWITCH	UNIT
G	4	BIPOLAR FOOTSWITCH	UNIT
H	6	PATIENT PLATE ELECTRODE	UNIT

Figure 2.1 Packing Configuration

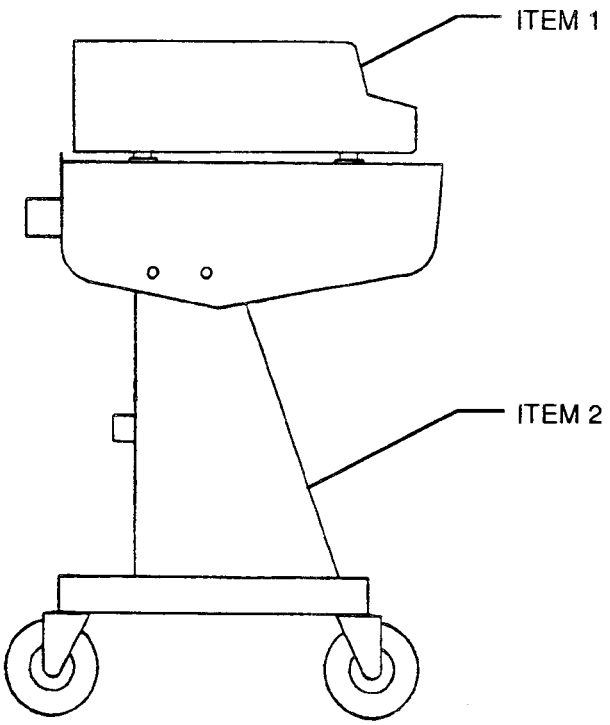

Figure 2.2 Generator/Cart Assembly

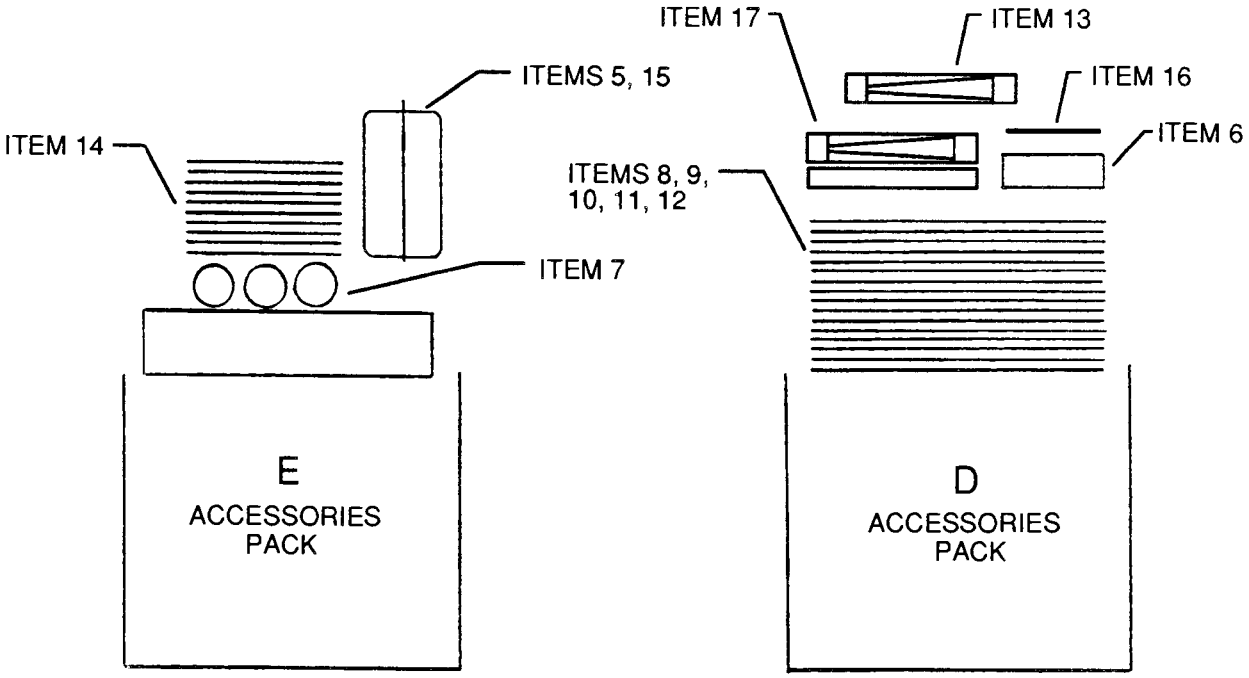

Figure 2.3 Accessories Packing

SECTION 3
INSTALLATION

EQUIPMENT ITEMS

The basic packaging of the F2–20 PC MIL Electrosurgical Apparatus includes:

ITEM NO.	QTY	DESCRIPTION	VALLEYLAB CATALOG #
1	1 EACH	ELECTROSURGICAL GENERATOR	F2–20 PC MIL
	2 EACH	INSTRUCTION MANUAL	945 110 052
	2 EACH	SERVICE MANUAL	945 100 117
2	1 EACH	MOBILE CART	E8006
3	1 EACH	MONOPOLAR FOOTSWITCH	E6008
4	1 EACH	BIPOLAR FOOTSWITCH	E6009
5	1 EACH	REUSABLE HANDSWITCHING PENCIL	E2502B
6	1 EACH	PATIENT PLATE ELECTRODE (PERMANENT PATIENT PLATE) WITH DUAL LEAD	E7001–1R PLATE E0009–1R CORD
7	13 EACH	8 OZ. TUBE CONDUCTIVE GEL	E5501
8	1 EACH	ELECTRODE, 7/32" COAGULATION BALL	E1002
9	1 EACH	ELECTRODE, 3/4" NEEDLE	E1003
10	16 EACH	ELECTRODE, 1." STRAIGHT SKIN INCISION BLADE	E1001
11	1 EACH	ELECTRODE, 3/32" ANGLED COAGULATION BALL	E1004
12	1 EACH	ELECTRODE, 3/8" CUTTING AND BIOPSY LOOP	E1005
13	1 EACH	FORCEPS 4–3/4" STRAIGHT TIP, PERMANENT, HANDSWITCHING	E4086
14	12 EACH	DISPOSABLE DISPERSIVE ELECTRODE (PATIENT RETURN ELECTRODE)	E7506
15	1 EACH	DISPOSABLE SWITCHING HANDLE PRE–STERILIZED	E2515
16	1 EACH	SURGICAL HANDLE AND CORD	E2003
17	1 EACH	FORCEPS 7" STRAIGHT TIP HANDSWITCHING INCLUDING HANDSWITCHING BIPOLAR CORD	E4087 E0018

GENERAL SET UP

The electrosurgical generator may be placed on the mobile mounting cart or any sturdy table or cart. It is recommended that the cart have conductive wheels. Refer to hospital procedures or local codes for detailed information.

Provide at least four to six inches of space around the sides and top of the generator for convection cooling. Under continuous use for extended periods of time, it is normal for the top and rear panel to be warm.

DANGER: Explosion hazard. Do not install the electrosurgical generator in areas using flammable anesthetics.

ENVIRONMENT

Operating Conditions

Temperature: 10 to 40°C
Humidity: 30% to 75%
Atmospheric Pressure: 500 to 1060 millibar

Storage and Shipping

Indoor storage is recommended.

Temperature: –40 to 70°C
Humidity: 10 to 100%
Atmospheric Pressure: 500 to 2500 millibar

POWER REQUIREMENTS

The Force 2 Electrosurgical Generator is designed to operate between 95 – 140 VAC or 190 – 270 VAC, 50/60 Hz. This allows the output to remain constant in case of brownouts or power surges.

The Force 2 is protected against current surges by a fuse mounted on the rear of the generator. The ON/OFF switch adds additional protection as a circuit breaker.

POWER PLUG

The Force 2 Electrosurgical Generator is shipped with an approved Hospital Grade three terminal connector.

Do not use extension cords or three prong to two prong adapters. The power cord assembly should be periodically checked for damaged insulation or connectors.

PROPER GROUNDING

To ensure patient safety the electrosurgical generator must be properly grounded.

The ground wire in the power cord is connected to the generator chassis and insures that no dangerous currents will flow from the cabinet of the generator in the event of internal electrical failure. Do not use extension cords or three–prong to two–prong electrical adapters.

Undesirable 50/60 Hz leakage currents are affected by the polarization of the 50/60 Hz input power. It is the responsibility of the user to ensure proper polarity and grounding of the power outlets supplying power to the electrosurgical generator.

PREOPERATIONAL CHECKOUT

Refer to Section 10, Power Up Self–Test.

INITIAL ADJUSTMENTS

All adjustments to the Force 2 are made at the factory before the generator is accepted by Quality Assurance

The only adjustable parameters within the Force 2 are the Radio Frequency Output Powers and the REM™ circuit. If either of these circuits need to be re–calibrated, proceed to Section 10.

CLEANING INSTRUCTIONS

Use a mild detergent and damp cloth to clean the generator cover, keyboards and cord. The generator is not sterilizable. Do not allow fluids to enter the chassis.

SECTION 4
ELECTROSURGICAL WARNINGS AND PRECAUTIONS

The safe and effective use of electrosurgery is dependent, to a large degree, upon factors solely under the control of the operator. There is no substitute for a properly trained and vigilant operating room staff. It is important that the operating instructions supplied with this or any electrosurgical equipment be read, understood and followed.

GENERAL PRECAUTIONS

Electrosurgery has safely been employed in numerous procedures. Nevertheless, special precautions may be required based on the presence of external or internal pacemakers, or monitoring equipment, or the patient's condition , including age, and size of the appendage or organ to be operated on. While physicians have successfully employed electrosurgery in performing circumcisions, Valleylab believes that the associated risks outweigh the benefits, particularly because other traditional, effective techniques are available. Accordingly, Valleylab recommends against the use of Monopolar or Bipolar electrosurgery for circumcisions. Before commencing any surgical procedure, the physician should be familiar with the medical literature on the use, complications, and hazards of electrosurgery in that procedure.

WARNING: Electrosurgery uses radio–frequency energy to cut and coagulate tissue. The sparking and heat associated with electrosurgery can provide an ignition source. Electrosurgery is inherently unsafe for use with flammable anesthetics or other flammable gases, near flammable fluids or objects, or with oxidizing agents. Observe appropriate fire precautions at all times when using electrosurgery. Restrict flammable materials including flammable gases, and oxidizing agents from the electrosurgical site.

- Do not use electrosurgery in the presence of flammable anesthetics or other flammable gases, flammable liquids, or flammable objects.

- Do not use electrosurgery in oxygen enriched atmospheres, nitrous oxide (N_2O) atmospheres, or in the presence of other oxidizing agents.

- Prevent accumulation of oxygen, other oxidizing gases such as nitrous oxide (N_2O), and flammable gases, under surgical drapes, or within the area where electrosurgery is performed.

- Verify that all oxygen circuit connections are leak–free before and during the use of electrosurgery. Verify that endotracheal tubes are leak–free, and that the cuff is properly sealed to prevent oxygen leaks.

- Do not use electrosurgery in the presence of naturally occurring flammable gases which may accumulate in body cavities such as the bowel.

- Do not use electrosurgery in the presence of flammable liquids (such as skin prepping agents and tinctures). Avoid pooling of flammable liquids.

- Do not place electrosurgical active accessories near, or in contact with, flammable materials (such as gauze). Electrosurgical accessories which are hot from use, or accessories which are activated, can cause a fire. The Valleylab E2400 Holster is designed to hold electrosurgical pencils and similar accessories safely away from patients, personnel, and surgical drapes.

Electrosurgical generators should be used with caution in the presence of internal or external pacemakers. Interference from the electrosurgical current can cause a pacemaker to enter an asynchronous mode or can block the pacemaker effect entirely. When questions arise, consult the pacemaker manufacturer and/or the cardiology department.

While using electrosurgery during a surgical procedure, the patient should not be allowed to come into direct contact with grounded metal objects (surgical table frame, instrument table, etc.). This may not be practical during certain procedures (e.g. those in which non–insulated head frames are used). Use extreme caution in those situations, to maximize patient safety.

Electrodes and probes found on monitoring, stimulation and imaging devices or similar equipment, can provide a path for high frequency current, even if those electrodes and/or probes are isolated at 60 Hz, insulated, and/or battery operated. The risk of an electrosurgical burn can be reduced but not eliminated by placing the electrodes or probes as far as possible from the electrosurgical site and the patient return electrode (also referred to as "patient pad" or "patient plate"). Protective impedances (resistors or RF inductors) installed in the monitoring leads may reduce the risk of such burns. The hospital biomedical engineer should be consulted for further information. Needles should not be used as monitoring electrodes during electrosurgical procedures.

When an electrosurgical unit is activated, the conducted and radiated electrical field may interfere with other electronic medical equipment (such as monitors). Provide as much distance as possible between the monitor and the electrosurgical generator to minimize interference paths.

Skin–to–skin contact (for example, between the arms and the trunk of the patient) should be avoided by the placement of two to three inches of dry gauze. This will reduce the potential for alternate site burns.

ELECTROSURGICAL GENERATOR

DANGER: Explosion hazard. Do not use in the presence of flammable anesthetics.

WARNING: Hazardous electrical output. This equipment is for use only by qualified personnel.

WARNING: Use of a conventional, non–REM™ patient return electrode will not activate the REM™ contact quality monitoring system.

WARNING: The activation tone is an important safety feature. DO NOT turn down to an inaudible level.

CAUTION: This equipment has an output which is capable of causing a physiological effect.

CAUTION: Electrical shock hazard. Do not remove cover. Refer to authorized personnel for service.

CAUTION: DO NOT connect more than one device to the ACCESSORY output. Both output jacks (3–pin and 1–pin) of the ACCESSORY output will activate simultaneously.

DANGER: HIGH VOLTAGE. Change fuses only when input power is off. Refer to trained personnel for service.

Never increase the power settings without first checking both the active and the patient return electrodes and their connections. In general, the active electrode should be utilized only for the minimum time necessary to achieve the desired surgical effect in order to minimize the possibility of unintended burns. This is especially true in pediatric and neonatal applications and where small appendages are involved.

Failure of the electrosurgical equipment to produce the desired effect at otherwise normal power settings may indicate faulty application of the patient return electrode or failure of an electrical lead. Do not

increase power output settings before checking for problems with accessory leads or misapplication of the return electrode. Effective contact between the patient and return electrode must be verified if the patient is repositioned after the initial application of the return electrode.

Potentially hazardous conditions may exist when electrosurgical accessories with similar connector types are used interchangeably. Be certain that Monopolar and Bipolar accessories are used in the appropriate power output receptacles.

The electrical cord of the generator should be connected to a properly grounded receptacle. Extension cords and/or adapter plugs should not be used.

Random electronic component failures may occur, leading to unintentional or increased output or non–function of the generator. A back–up generator should be available.

Refer to this manual for preventative maintenance recommendations, function, and output power verification procedures. Refer servicing to qualified personnel, or contact Valleylab.

ACTIVE ACCESSORIES, DISPOSABLES, PATIENT RETURN ELECTRODES

Read the instructions, cautions and warnings provided with electrosurgical accessories before using.

WARNING: Keep active accessories away from the patient when not in use.

CAUTION: Accessories must be connected to the proper receptacle type. In particular, Bipolar accessories must be connected to the MICROBIPOLAR receptacle only. Improper connection of accessories may result in inadvertent generator activation or a REM™ alarm.

CAUTION: Accessories labeled as "disposable" are single use only. Do not reuse or resterilize.

Special precautions should be taken when utilizing electrosurgery in close proximity to or in direct contact with any metal objects including, but not limited to, Gomco clamps, Kocher clamps, and hemostats. Such electrosurgical usage, particularly over prolonged periods of time, could result in unintentional and unwanted tissue destruction and burns.

CAUTION: Some surgeons may elect to "buzz the hemostat" during surgical procedures. The hazards of such a procedure probably cannot be reduced entirely, and burns to the surgeon's hands are possible.

Suction Coagulators

WARNING: Care should be taken to insure that the outside of the coagulator suction tube remains free of blood and mucus. Failure to clean the coagulator suction tube can allow electrical conductance by means of the contaminants, which may result in unintended burns.

CAUTION: To avoid the possibility of a burn to the surgeon, always place the generator in the Standby mode prior to bending or reshaping the coagulator suction tube.

Do not immerse in conductive fluids.

Patient Return Electrodes

A critical element in the safe use of Monopolar electrosurgery is the proper placement of the patient return electrode. To avoid radio frequency burns beneath the patient return electrode, follow all directions for the placement, use, and removal of the return electrode, as supplied on the product package.

To enhance patient safety, monitor the patient return electrode to assure firm contact with the skin. This is especially important during procedures involving long periods of "keying". Monitoring the patient return electrode for firm skin contact can reduce REM™ alarms.

Valleylab recommends the use of REM™ dual–section patient return electrodes to maximize patient safety.

WARNING: Never cut the patient return electrode to reduce size.

DO NOT apply a patient return electrode for a Bipolar–only procedure.

SECTION 5
DESCRIPTION OF CONTROLS, INDICATORS, AND RECEPTACLES

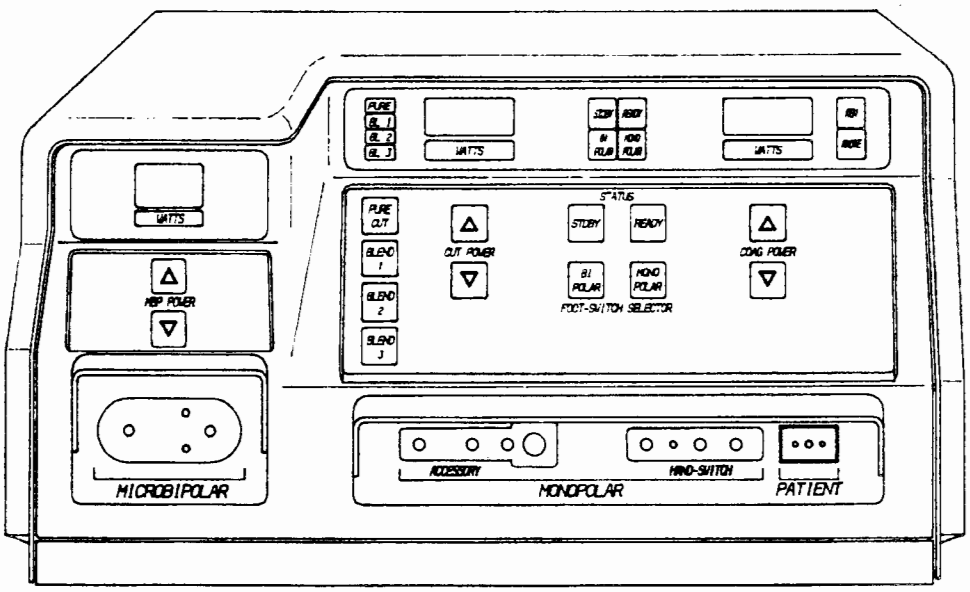

Figure 5.1 Front View

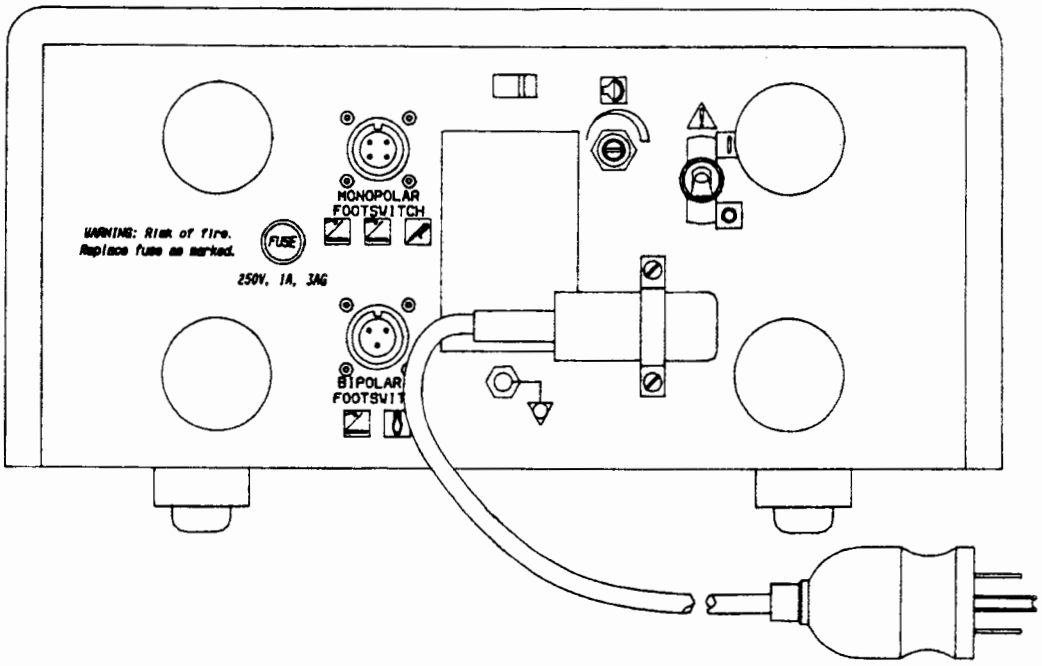

Figure 5.2 Rear View

CONTROLS

STDBY	Standby – Depressing this button places the electrosurgical generator in a hold mode. The generator cannot be activated and all audio alarms are silenced. Power settings are retained in memory and the display shows "dashes".
READY	Ready – Depressing this button places the generator into service with power outputs, displays and alarms fully functional.
MONO POLAR	Monopolar – Selects monopolar footswitch control for activating ACCESSORY output.
BI POLAR	Bipolar – Selects bipolar output when using the monopolar footswitch.
△	Up – Increases power in the selected mode. A single depression of the key increases the power setting by one watt. Continuous depression gradually increases the power to maximum.
▽	Down – Decreases power in the selected mode. A single depression lowers the power setting by one watt. Continuous depression gradually decreases the power to minimum.
PURE CUT	Cut – Selects pure cut with lowest level of hemostasis.
BLEND 1	Blend 1 – Selects cut with minimum hemostasis.
BLEND 2	Blend 2 – Selects cut with average hemostasis.

BLEND 3

Blend 3 – Selects cut with maximum hemostasis.

READY

CUT POWER

Power Control Pencil Mode – The Power Control Pencil feature does not have a dedicated button to access (illuminate) this mode. A two–step procedure is required. For specific instructions for activation, refer to Section titled Power Changes.

READY

COAG POWER

Low Voltage Coag – Low Voltage Coag does not have a dedicated button to access (illuminate) this mode. A two–step procedure is required. For a detailed explanation of the Low Voltage Coag mode, refer to Section titled Recommendations During Surgery.

INDICATORS

STDBY

Standby Indicator – Indicates generator is on, but cannot activate outputs.

READY

Ready Indicator – Indicates generator is ready for use.

PURE
BL1
BL2
BL3

Cut Mode Indicators – One of four CUT mode indicators is illuminated to show the selected Cut mode.

Power Setting Display – The digital power setting display is visible on the generator in the Ready mode. The number displayed indicates the nominal power, in watts, which will be delivered to the patient when the mode is activated. In Standby mode "dashes" are displayed.

WATTS

Output Power Indicators – The indicator labeled "Watts" illuminates when that output power (Cut, Coag, Bipolar) has been activated by the surgeon. One of the two distinct mode indicator tones will sound in conjunction with the visual output power indicator.

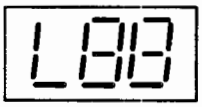

Low Voltage Coag Mode Indicator – An "L" in the hundreds digit of the Coag Power Setting Display indicates that the Low Voltage Coag mode has been selected.

Bipolar Indicator – This indicator is illuminated when the generator's Monopolar footswitch control is selected to activate the Bipolar output.

Monopolar Indicator – This indicator is illuminated when the generator's monopolar footswitch is selected for Monopolar Accessory activation.

Remote Indicator – This lamp will illuminate and the audio alarm will sound once when the remote power change feature is activated. When this indicator is illuminated, power changes can be made using the Power Control handswitching pencil.

ALERTS

REM™ Fault Indicator – This indicator illuminates when the patient contact quality monitoring system senses that contact between the patient return electrode and the patient is not adequate. The audio tone will sound twice when the condition is first detected. The generator will not produce output power when this alarm condition exists. The alarm condition is cleared when the REM™ system senses that the patient/pad contact resistance is within the acceptance range.

RECEPTACLES

PATIENT

Patient Return Electrode Receptacle – This 2–pin receptacle accepts the patient return electrode connector used in monopolar procedures. The receptacle will accept both REM™ (dual–section) and conventional patient return electrode connectors.

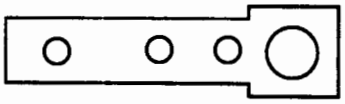

ACCESSORY

Monopolar Active Receptacle (Accessory) – This receptacle has two output jacks. It will accept 3–pin handswitching active accessories or standard 1–pin accessories which can be activated by the monopolar footswitch. Cut and Coag modes may be activated at this receptacle. The handswitching pencil can be footswitch activated when connected to this output jack. Caution: DO NOT connect more than one device to the ACCESSORY output receptacle. Both output jacks (3–pin and 1–pin) will activate simultaneously.

HAND–SWITCH

Monopolar Active Receptacle (Handswitch) – This receptacle will accept the 3–pin handswitching active accessories. Power output from this receptacle is activated only by using the handswitch mechanism. No power is available through use of the footswitch. Cut and Coag modes may be activated at this receptacle. Note: The Power Control pencil is only functional through this jack.

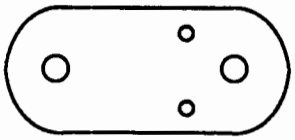

MICROBIPOLAR

Bipolar Active Receptacle – This receptacle will accept 3–pin handswitching bipolar accessories. These accessories can also be footswitch activated. This receptacle will also accept 2–pin bipolar footswitching accessories.

REAR PANEL FUNCTIONS

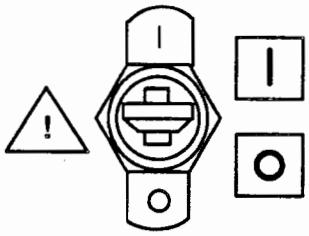

ON/OFF Switch – This switch includes a circuit breaker. Press the toggle upward to turn power on and down to shut power off.

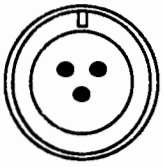

BIPOLAR FOOTSWITCH

Bipolar Footswitch Receptacle – This 3–pin receptacle accepts a single–treadle Bipolar footswitch connector.

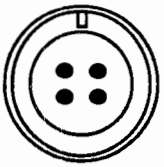

MONOPOLAR FOOTSWITCH

Monopolar Footswitch Receptacle – This 4–pin receptacle accepts a two–treadle Monopolar footswitch connector.

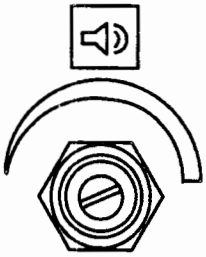

Audio Volume Control – The volume of the Cut, Coag, and Bipolar mode indicator tones produced when the generator is activated may be adjusted with this control. The volume of the audio alarm for alert conditions is not adjustable.

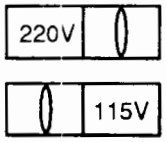

Input Power Source

Input Power Source Switch – The Force 2 will operate on both 120 volts AC power (nominal) and 220 volts AC power (nominal).

SECTION 6
SET UP INSTRUCTIONS FOR GENERAL USE

The electrosurgical generator may be placed on the mobile cart or any sturdy table or cart. It is recommended that the cart have conductive wheels.

Provide at least four to six inches of space around the sides and top of the generator for convection cooling. Under continuous use for extended periods of time, it is normal for the top and rear panel to be warm.

The Force 2 Electrosurgical Generator is shipped with an approved Hospital Grade three terminal connector for use with 115 volt (nominal) AC power, 50/60 Hz. Check slide switch on rear panel of generator. Ensure switch is in the "115V" position before connecting the generator to AC power.

POWER–UP SELF TEST

Plug the generator into a grounded receptacle (extension cords and/or adapter plugs should not be used). Turn the power on using the ON/OFF switch which is located on the rear panel.

The generator will conduct an internal self–test during which a tone will sound, digital displays will show "8"s, and **all lamps will be on**. Insure that all digit segments, mode, alert, and power indicators light. If any of these indicators do not light, record and send generator to Biomedical engineer for service.

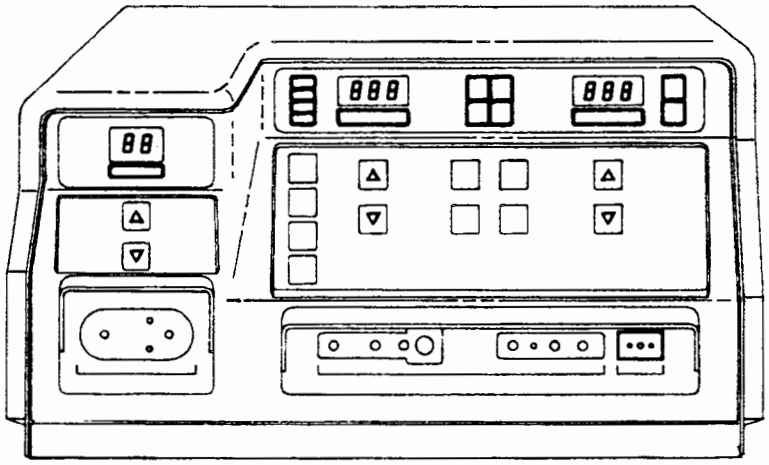

Figure 6.1 Generator Self–Test Mode

In five to seven seconds, following the self–test, the generator will enter the Standby mode with the digital displays showing dashes.

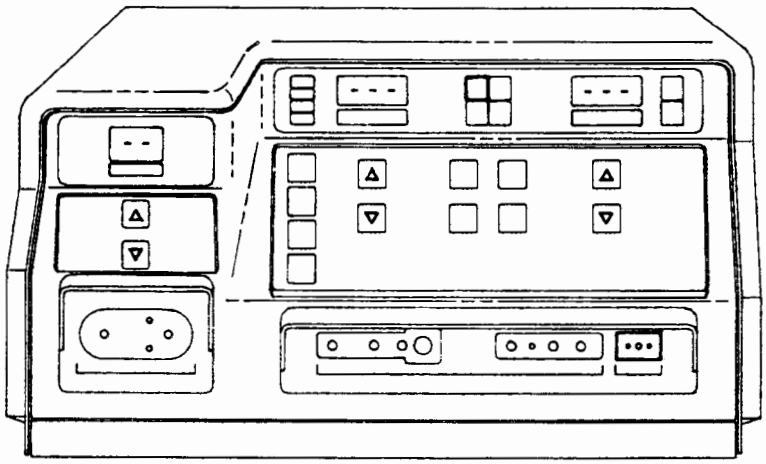

Figure 6.2 Generator Standby Mode

Depress the READY button to place the generator into service. Digital displays will indicate one watt and the MONOPOLAR footswitch indicator will be illuminated.

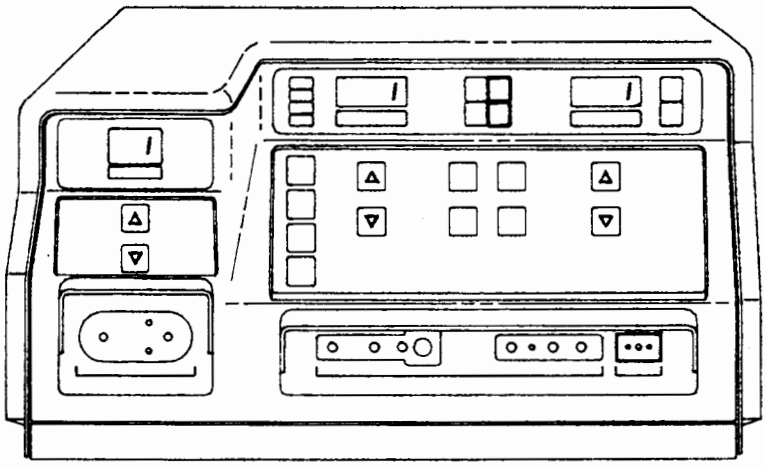

Figure 6.3 Generator Ready Mode

SELECTING MODES AND POWER LEVELS FROM LEFT TO RIGHT

Set Bipolar power as desired.

Set Cut power and mode as desired.

Set Footswitch as desired.

Set Coag power and mode as desired.

To prevent inadvertent activation, return the generator to the Standby mode until ready for use. The power setting display will show "dashes". Note: All mode and power settings will be retained in memory and will appear on the appropriate displays when the generator is returned to the Ready mode.

While in the Standby mode, connect appropriate accessories to the generator (active accessory, footswitches, etc.). Refer to the Accessory Connections to the Generator section for illustrations of common set–ups.

PATIENT RETURN ELECTRODE APPLICATION

DO NOT apply a patient return electrode for a Bipolar only procedure.

To apply a patient return electrode to the patient, select a well vascularized, convex skin surface which is in close proximity to the surgical site. Avoid scar tissue, bony prominences, adipose tissue and areas where fluid may pool. Shave, clean, and dry the application site as needed.

For correct application and removal of the patient return electrode, follow all instructions for use found on the product packaging.

If Bipolar forceps are connected to the Bipolar output receptacle, the REM™ alarm indicator will be lit, but a patient return electrode should not be connected to extinguish the alarm. The Bipolar mode can be activated with an active REM™ alarm condition.

Capacitive Pads

Valleylab does not recommend the use of capacitive patient return electrodes due to the potential of a high impedance condition at the patient/pad interface.

TYPICAL POWER SETTINGS FOR VARIOUS SURGICAL PROCEDURES

The power level used for various surgical procedures varies considerably with the surgeon's technique and the size of the active electrode. A needle electrode will require less power to sustain a spark than a large ball electrode. Moreover, one surgeon may perform a procedure by electrosurgically severing tissue with a cutting or blended waveform. Another surgeon might perform the same procedure by simply desiccating the tissue at a much lower power level.

A general outline of typical power settings:

1. Low Power – Under 30 watts
   a) Neurosurgery (both bipolar and monopolar)
   b) Laparoscopic sterilization (both monopolar and bipolar)
   c) Vasectomies
   d) Dermatology
   e) Oral surgery
   f) Plastic surgery

2. Medium Power – COAG 30 to 70 watts, CUT 30 to 150 watts
   a) General surgery
   b) Laparotomies
   c) Head and neck surgery (ENT)
   d) Major orthopedic surgery
   e) Major vascular surgery
   f) Routine thoracic surgery
   g) Polypectomy

3. High Power – COAG over 70 watts, CUT over 150 watts
   a) Transurethral resections (CUT 120–300 watts; COAG 50–120 watts, depending on the thickness of the resection loop and the technique of the surgeon)
   b) Thoracotomies (heavy fulguration, 70 to 120 watts)
   c) Ablative cancer surgery, mastectomies, etc. (CUT 180–300 watts; COAG 70–120 watts)

IF THE PROPER SETTING IS NOT KNOWN FROM PERSONAL EXPERIENCE, ONE SHOULD SET THE GENERATOR AT A VERY LOW SETTING AND CAUTIOUSLY INCREASE POWER UNTIL THE DESIRED EFFECT IS ACHIEVED.

POWER OFF

Depress the STDBY button to return the generator to the Standby mode. Disconnect all accessories. Turn the power off using the ON/OFF switch which is located on the rear panel.

ACCESSORY CONNECTIONS TO THE GENERATOR

WARNING: KEEP ACTIVE ACCESSORIES AWAY FROM PATIENT WHEN NOT IN USE.

Refer to the Basic Packaging list in the Section EQUIPMENT ITEMS for item numbers of accessories.

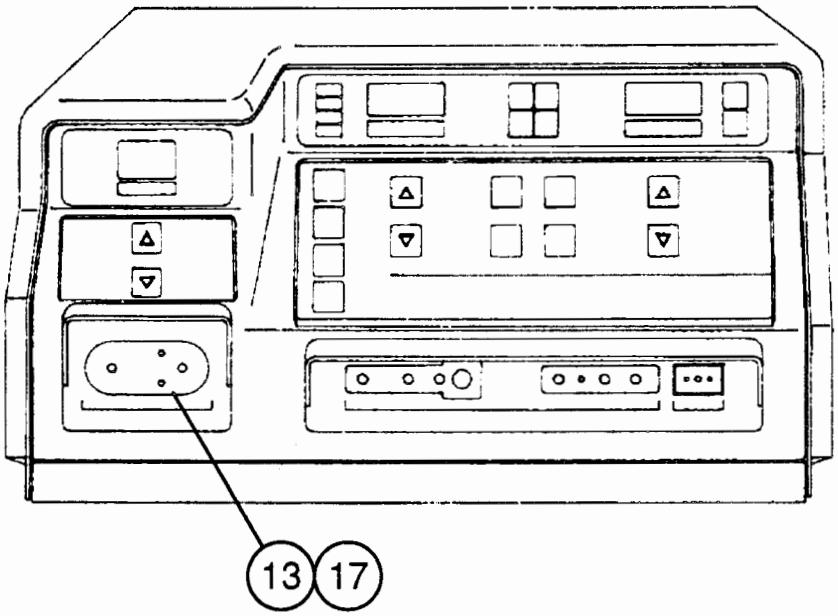

Figure 6.4 Bipolar Handswitching Forceps

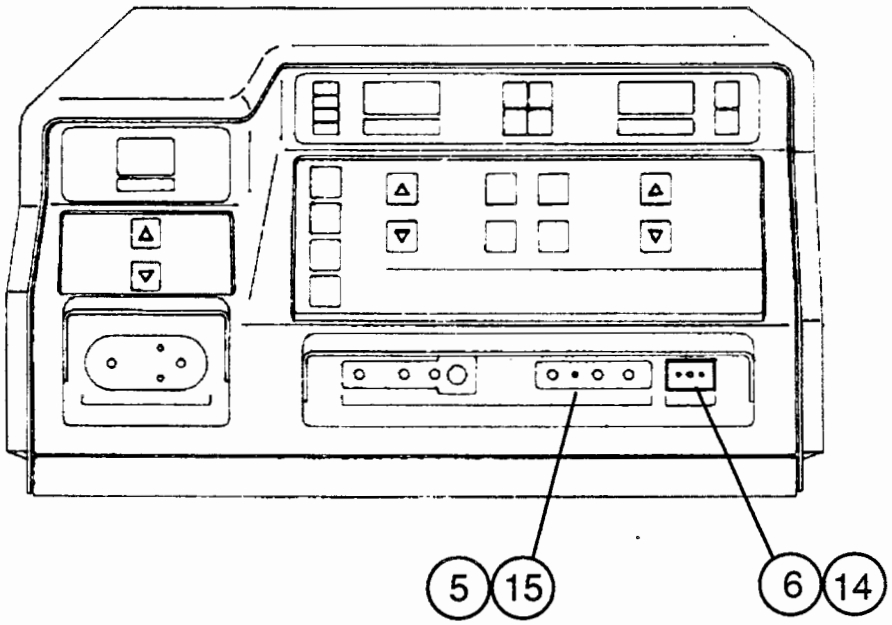

Figure 6.5 Handswitching Pencil

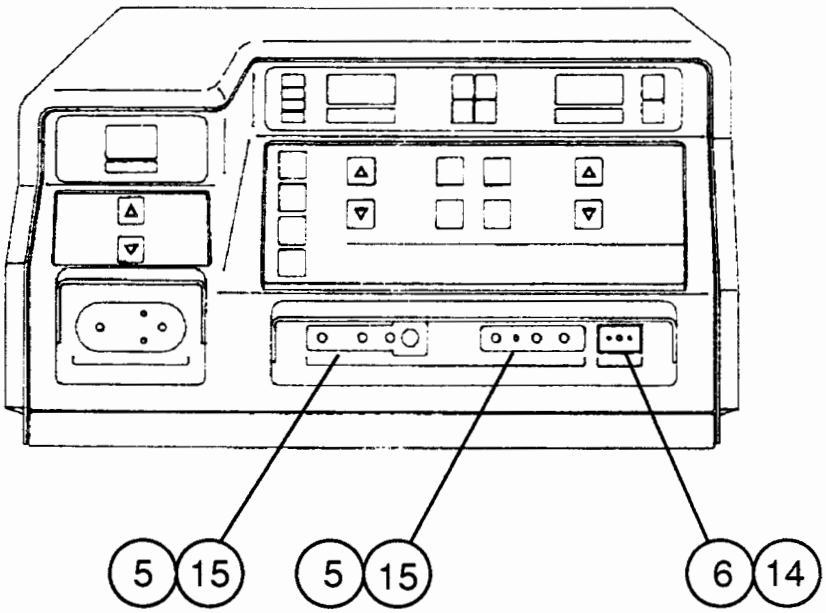

Figure 6.6 Simultaneous Coag with Handswitching Pencils

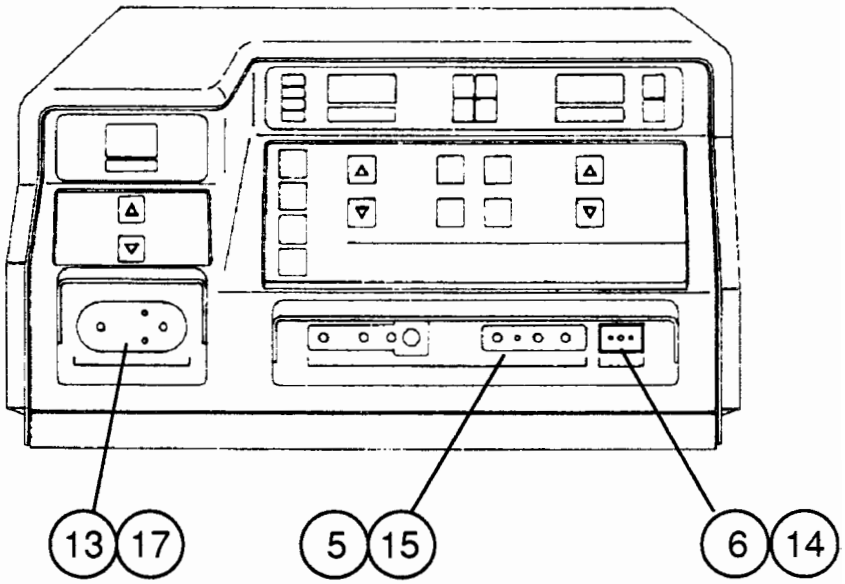

Figure 6.7 Handswitching Pencil and Bipolar Forceps

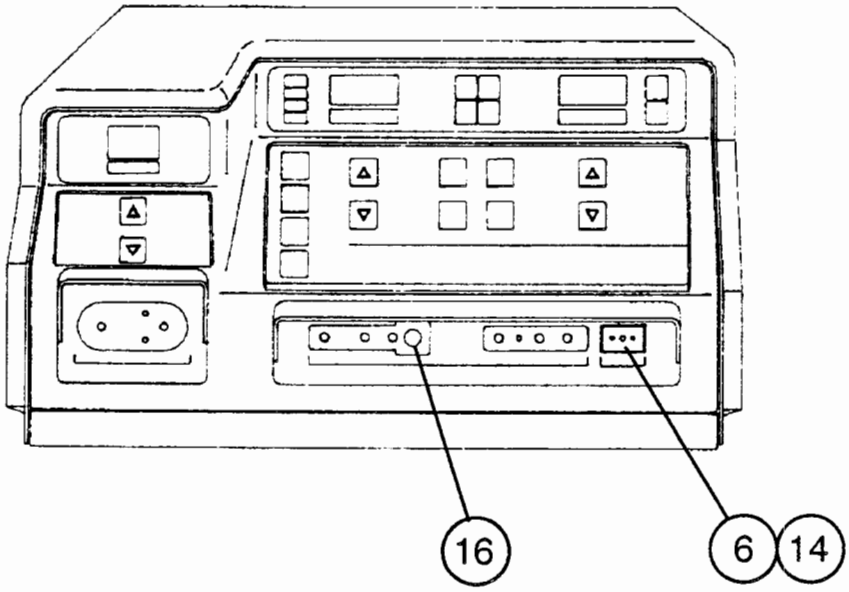

Figure 6.8 Footswitching Surgical Handle

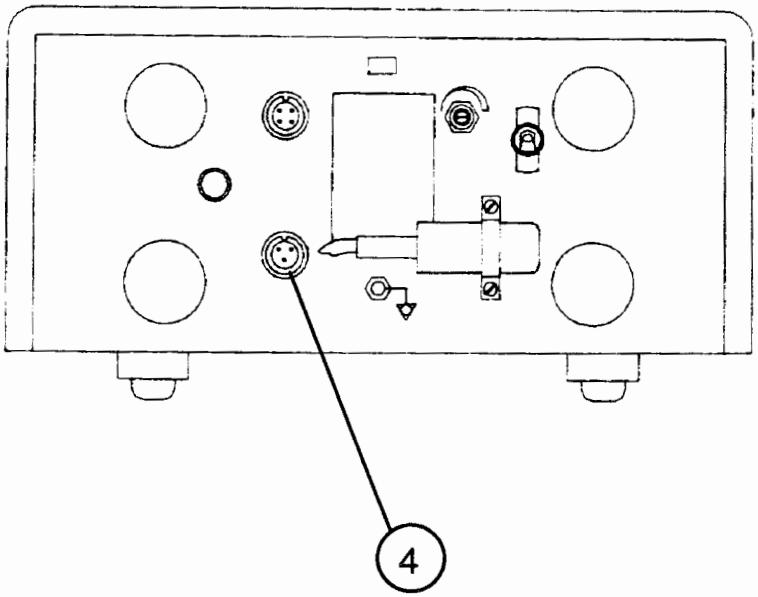

Figure 6.9 Bipolar Footswitch Connection

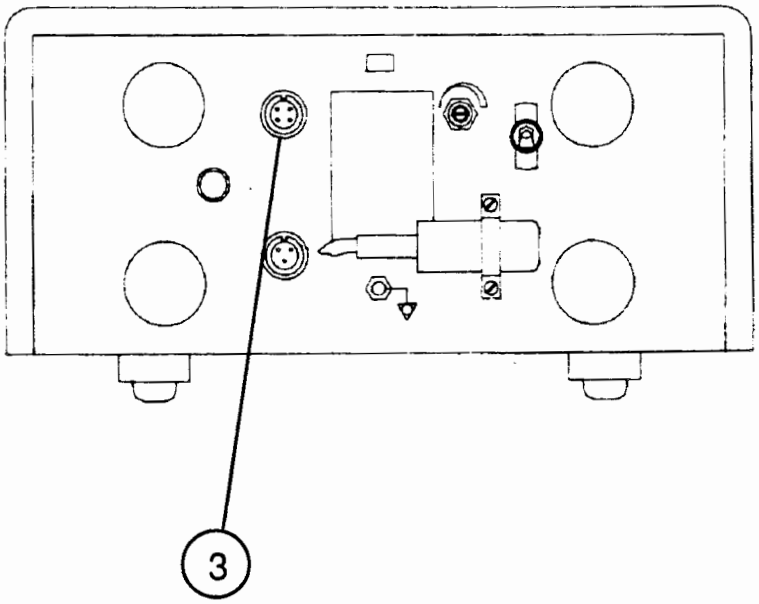

Figure 6.10 Monopolar Footswitch Connection

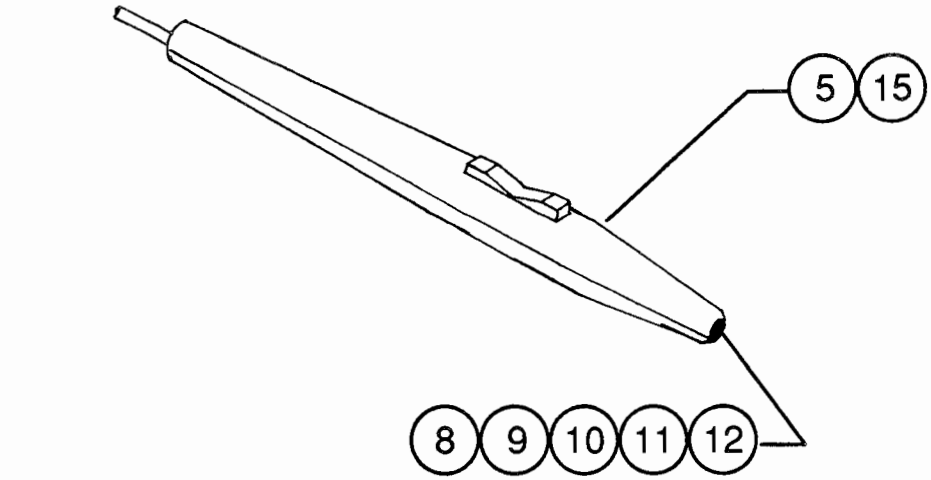

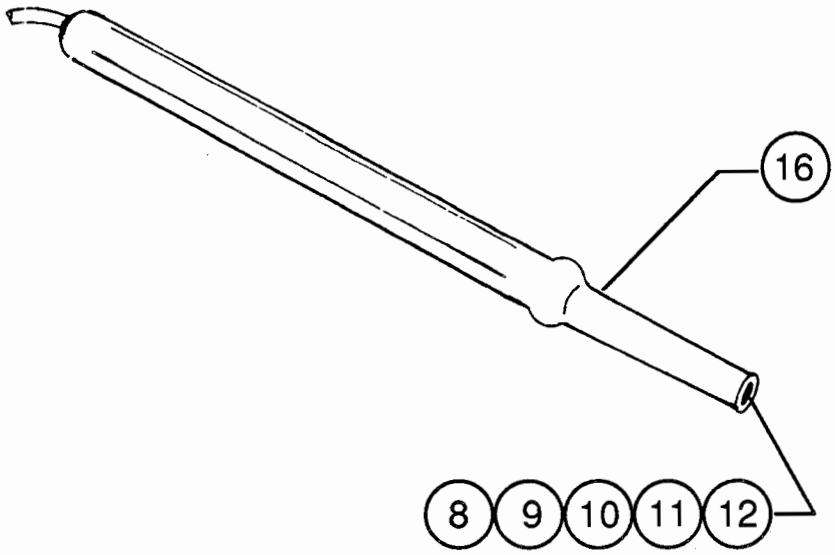

Figure 6 11 Handswitching Pencil and Footswitching Surgical Handle (electrodes not shown)

SECTION 7
GENERAL ELECTROSURGERY

KEYING/ACTIVATION SYSTEMS

The Force generator can be activated with either a footswitch or by hand–held switching instruments such as forceps or handswitching pencils.

FOOTSWITCHES (Items 3 and 4)

The Force 2 generator may be used with the Valleylab Monopolar and Bipolar footswitches. Both are made of heavy cast metal, have metal protective guards to protect against accidental depression, and are explosion–proof and splash–proof. The cable length on Valleylab footswitches is 10 feet. Footswitch pedals are labeled for cut and coag activation.

HANDSWITCHING FORCEPS AND PENCILS (Items 13 and 5,15)

The receptacles in the Monopolar section of the jack panel are designed to accept handswitching accessories such as handswitching pencils and monopolar switching forceps. On each receptacle (ACCESSORY, HAND–SWITCH) the banana jack at the extreme left is the active electrode terminal. The second terminal from the left carries the Coag activation signal, so that when the active pin is shorted to the second pin, Coag is activated. When the third pin (far right) is shorted to the active pin, Cut is activated.

If the Power Control Pencil feature is initialized, then the following keying circuit is in effect: When both Cut and Coag terminals are connected to the active terminal, the power setpoint will be decreased; When Cut is connected to Coag, the Power Control Pencil feature is activated or power is increased.

When handswitching bipolar forceps are used, the forceps must have its switching design compatible with the Force 2 generator. That is, the activation must be brought about by switching one of the control leads to the active lead. The four pin Bipolar connector is wired as follows: The switching pins (the two small holes above and below the larger holes) are switched to the large pin on the right which can be thought of as the "active" side of the output. The other large pin (the large hole on the left) can be thought of as the "patient" side of the output, although the only electrical difference between the "active" and the "patient" is the reference of the handswitching input.

For handswitching pencil activation, the Cut and Coag modes of operation are switch selectable by means of fingertip controls built into the electrode handle. If button switches are used, the switch nearer the active electrode activates the Cut mode. If a rocker switch is used, a forward motion activates the Cut mode. Valleylab handswitching pencils are splash–proof.

USE OF MULTIPLE ACTIVE ELECTRODES

The Force 2 will permit simultaneous, independent use of two active electrodes in the Coag mode when fulgurating from the MONOPOLAR (HAND–SWITCH and ACCESSORY) receptacles. The generator will not permit the use of more than one output in any other modes.

When the first keying command is for Coag power, a second keying command for Coag output at a second electrode will activate the second electrode. Both electrodes are driven in parallel with the indicated Coag power output shared between them. The percentage of power delivered to each electrode will depend on the impedance between the active electrode and the patient return electrode.

The lower impedance electrode will receive the most power. If one electrode is in good contact with moist tissue, the second electrode may have insufficient voltage available for sparking and may fulgurate poorly.

High voltage relays connect the first and second outputs. These relays cannot be opened or closed while current is flowing through them. For this reason there is a momentary cessation of generator output when the second Coag output is activated or released.

There are three outputs which can be connected concurrently, but not activated simultaneously. There are two MONOPOLAR outputs; one keyed at the pencil and the other keyed by the footswitch or handswitch. The third output, MICROBIPOLAR, can be operated by keying the output with a handswitching forceps, or by selecting the bipolar footswitch mode on the front panel and keying the output with the monopolar footswitch, or by using a bipolar footswitch.

SECTION 8
TECHNICAL SPECIFICATIONS

In this Section, "typical" refers to a specification that is within 20% of a stated value.

OUTPUT WAVEFORM

Cut	500 kHz sinusoid
Blend 1	500 kHz bursts of sinusoid at 50% duty cycle recurring at 31 kHz
Blend 2	500 kHz bursts of sinusoid at 37.5% duty cycle recurring at 31 kHz
Blend 3	500 kHz bursts of sinusoid at 25% duty cycle recurring at 31 kHz
Coag	500 kHz damped sinusoidal bursts with a repetition frequency of 31 kHz
Low Volt Coag	500 kHz bursts of sinusoid at 25% duty cycle recurring at 31 kHz
Bipolar	500 kHz sinusoid, unmodulated

OUTPUT CHARACTERISTICS

Mode	Maximum (open circuit) P–P Voltage	Rated Load (Ohms)	Nominal Power (at Rated Load) (Watts)	Crest Factor at Rated Load (typical)
Cut	3000	300	300	1.9 @ 100W
Blend 1	3500	300	250	3.3 @ 100W
Blend 2	3700	300	200	4.0 @ 100W
Blend 3	4000	300	150	4.8 @ 100W
Coag	7000	300	120	9.0 @ 50W
Low Volt Coag	4000	300	99	4.8 @ 100W
Bipolar	800	100	70	2.0 @ 40W

Power readouts agree with actual power into rated load to within ± 15% or 5 watts, whichever is greater.

LOW FREQUENCY LEAKAGE (50/60 HZ)

Source current, patient leads, all outputs tied together.

Normal polarity, intact chassis ground	< 10 microamperes
Normal polarity, ground open	< 100 microamperes
Reverse polarity, ground open	< 100 microamperes
Sink current, 140V applied, all inputs	< 150 microamperes
Chassis source current, ground open	< 100 microamperes

HIGH FREQUENCY RISK PARAMETERS

Bipolar RF leakage current	< 150 milliamperes.
Monopolar RF leakage current	< 150 milliamperes.

REM™ CONTACT QUALITY MONITOR

Measurement Frequency	140 kHz ± 20 kHz
Measurement Current	3.0 mA max

Acceptable Resistance Ranges:

Single–area pad	nominally < 20 ohms
Dual–area REM™ pad	nominal range 5 – 135 ohms

If impedance measured is outside the acceptance range, a REM™ fault condition will occur. In the REM™ mode, if resistance increases by more than 40% above the reference value, or above 135 ohms, an alarm will be generated .

INPUT POWER SOURCE

Nominal Voltage:	115 Volts RMS	or	220 Volts RMS
Regulation Voltage:	95–140 Volts RMS	or	190–270 Volts RMS
Operating Range:	85–140 Volts RMS	or	170–275 Volts RMS

Current	Idle:	0.4 A, max	or	0.2 A, max
	Cut:	9 A, max	or	6 A, max
	Coag:	4 A, max	or	1.5 A, max
	Bipolar:	3 A, max	or	0.75 A, max

POWER CORD LENGTH

15 feet

AUDIO VOLUME

Mode indicator tones are adjustable from 45 dBA minimum to > 65 dBA at 1 meter maximum. The Force 2 has two distinctly different mode indicator audio tones to indicate either the Cut or the Coag/Bipolar activations. The mode indicator audio tones are adjustable. The alarm tones are not adjustable.

DISPLAYS/CONTROLS

The front panel controls and indicators of the Force 2 are visible and clearly identifiable from a distance of at least 8 feet (2.5 meters).

WEIGHT

23 lbs., 10.4 kg

SIZE

8 x 13 x 21 inches, 20 x 33 x 53 cm

Specifications subject to change without notice.

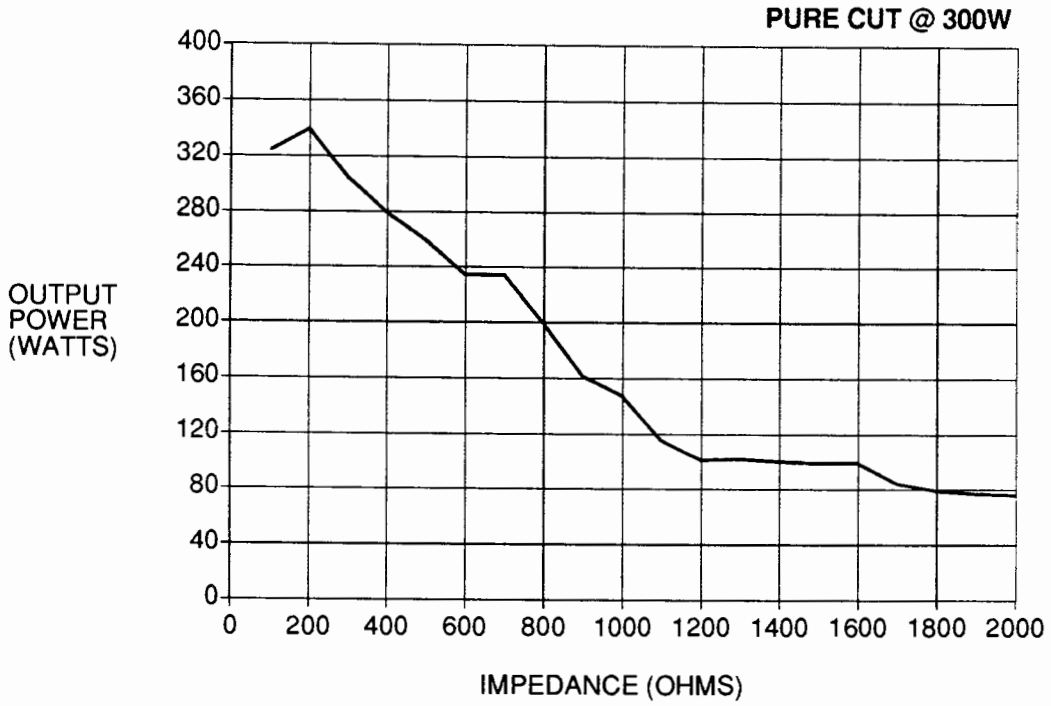

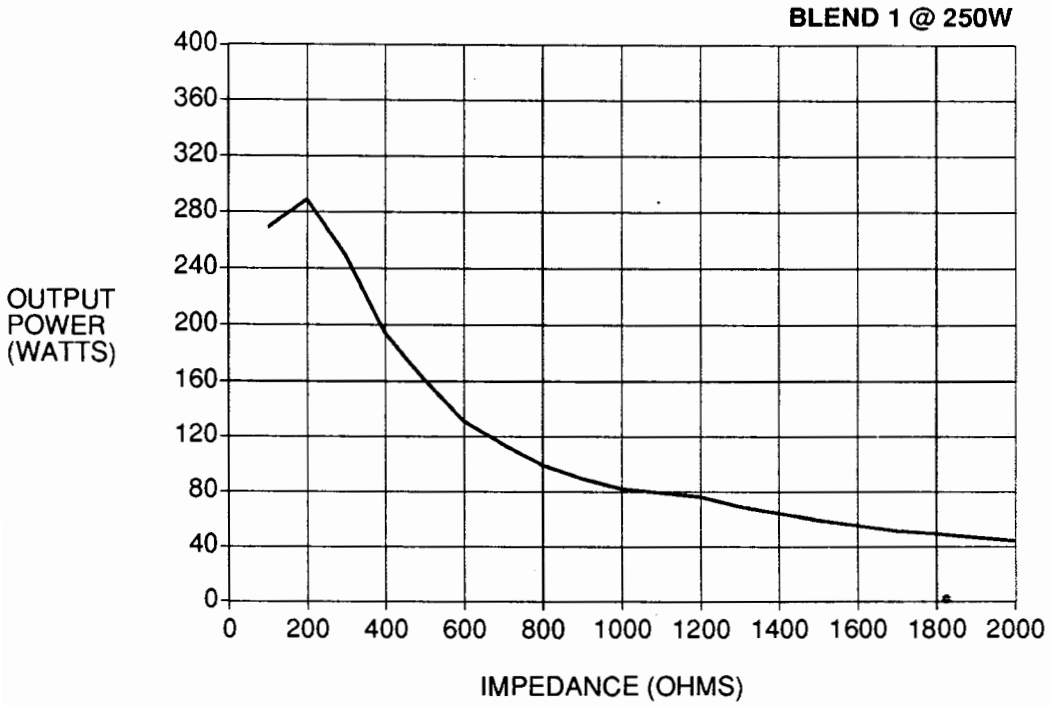

Figure 8.1 Typical Output Power vs Load – Monopolar Cut Modes

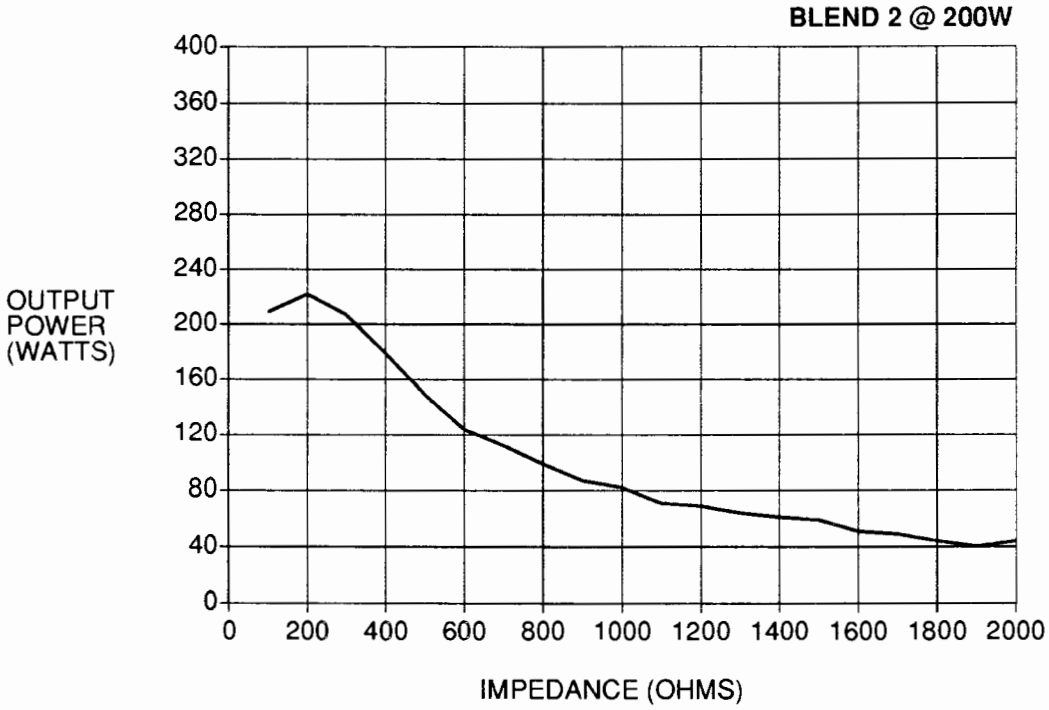

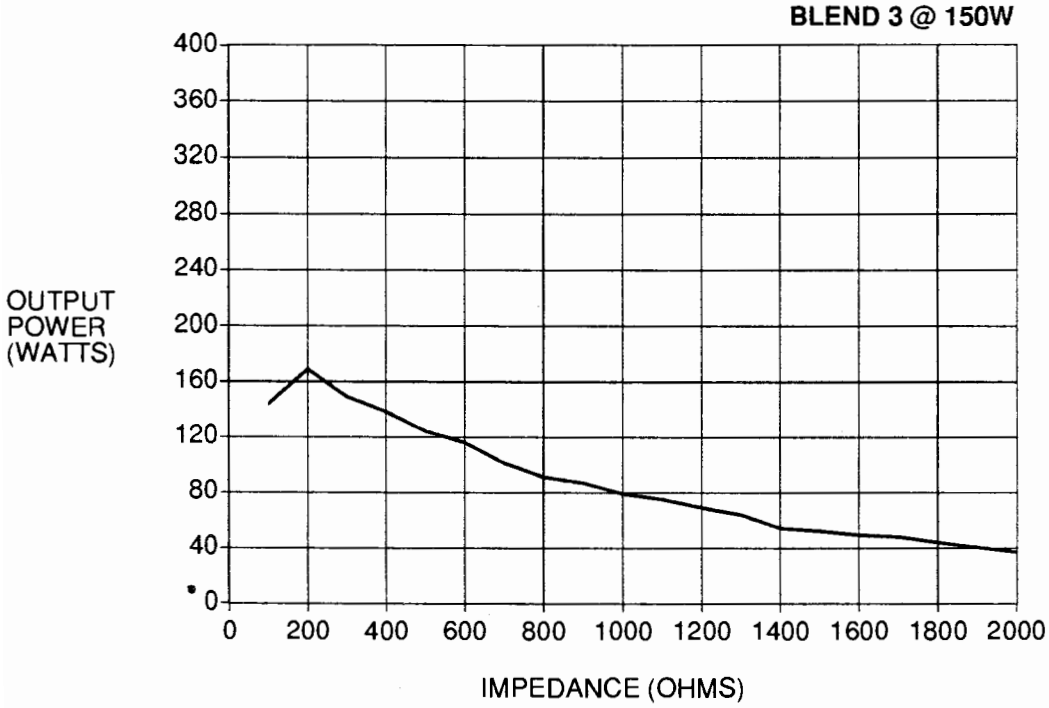

Figure 8.1 Typical Output Power vs Load – Monopolar Cut Modes (Continued)

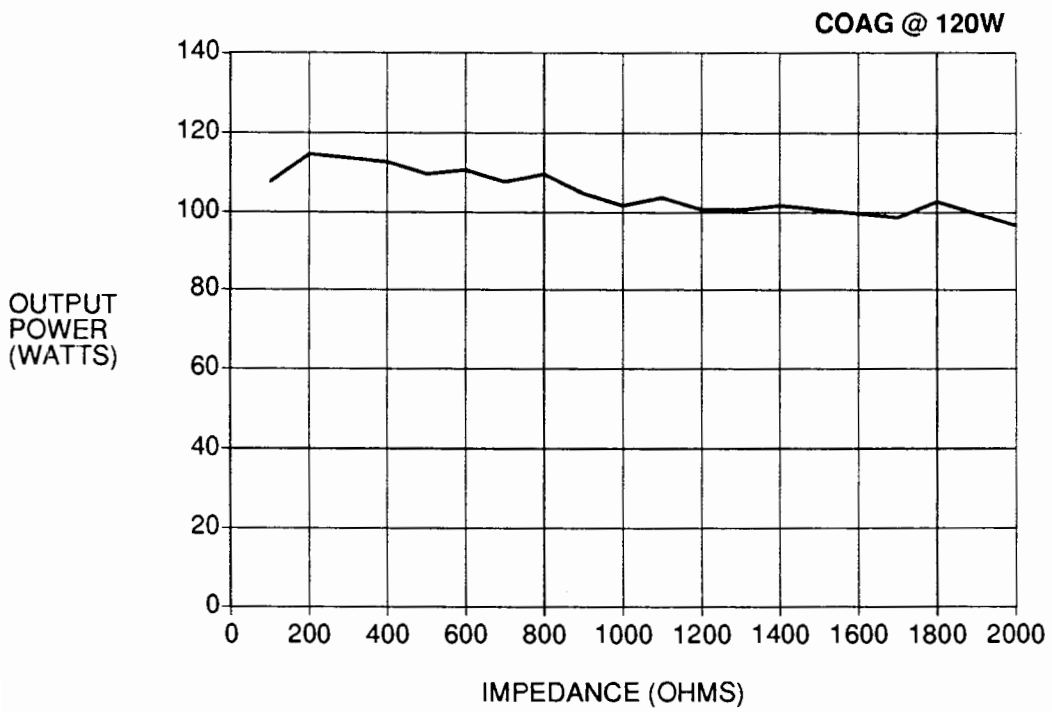

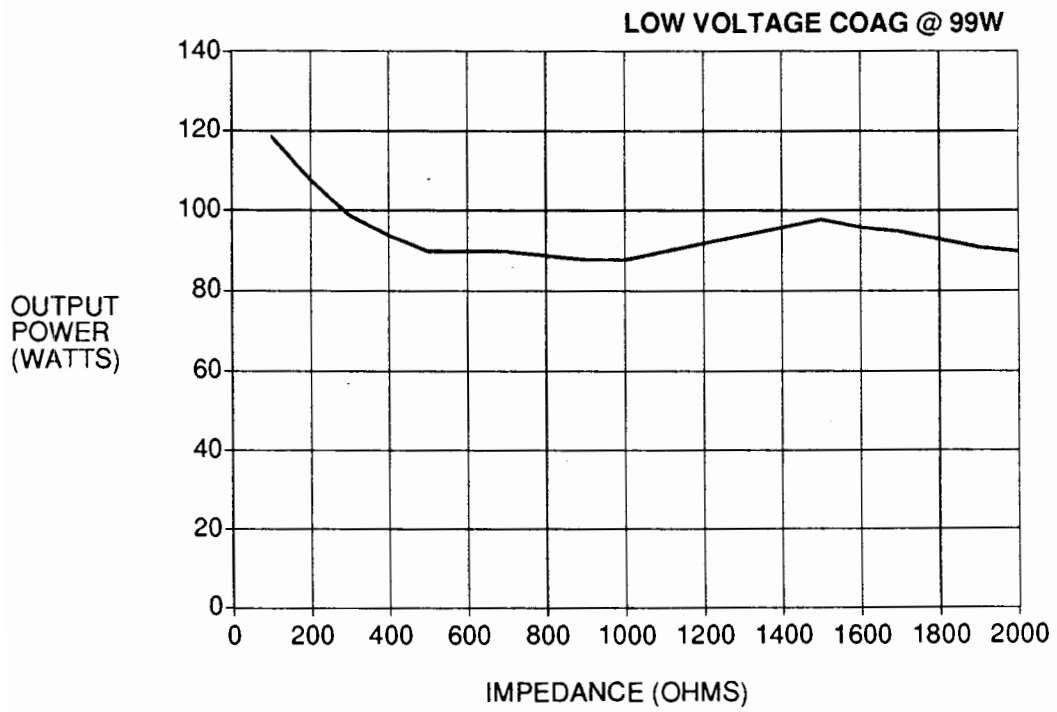

Figure 8.2 Typical Output Power vs Load – Coag Modes

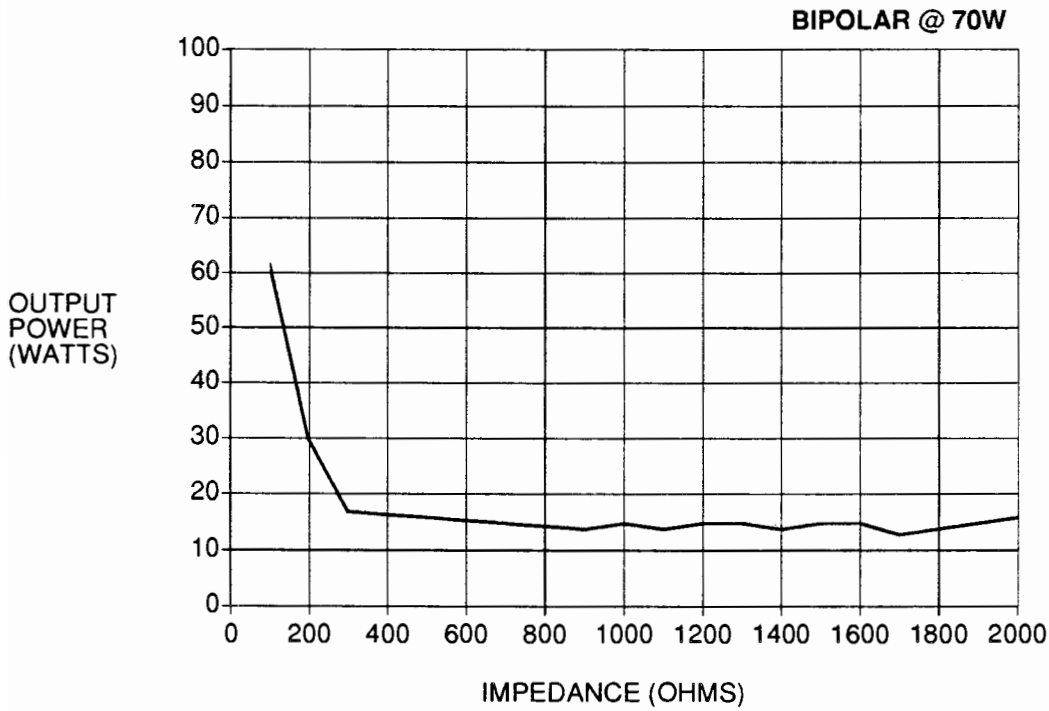

Figure 8.3 Typical Output Power vs Load – Bipolar

SECTION 9
FUNCTIONAL DESCRIPTIONS

OPERATIONAL DESCRIPTION/BLOCK DIAGRAM

An operational description of the block diagram in Figure 9.1 will give basic descriptions of the circuitry contained in each block. In order to make the block diagram flow logically, it was necessary to break each of the Printed Circuit Assemblies (PCA) into small blocks.

Beginning with the AC line into the generator, power flows through the ON/OFF switch and circuit breaker to two main areas. The first is the Low Voltage Transformer which has two secondaries. One of the two secondaries feeds a full wave bridge whose output is filtered and supplied to the +12 volt regulator. The other secondary is rectified, filtered and supplied to the +5 volt regulator. Both of these regulators are linear series pass devices located on the Low Voltage Heatsink Assembly. The regulated +12 and +5 supplies are routed to all PCA's via ribbon cables to power all of the low voltage devices in the generator.

The AC line also feeds directly to the HV bridge and voltage doubler. This unregulated HVDC is used as a raw supply for the variable High Voltage switchmode power supply. The unregulated supply voltage at nominal line and no load is approximately 310 VDC.

The regulated high voltage supply consists of seven major parts. The heart of the supply is an integrated circuit known as a Pulse Width Modulator (PWM). This chip has been designed to drive its output at 80 kHz. A control voltage proportional to the desired output power of the generator is supplied to the PWM. The PWM is isolated from the AC line and power devices by a pair of pulse transformers. The MOSFET bridge consists of four power MOSFETs which, when coupled with the Power Supply output transformer, form a full wave bridge. The output of this transformer is rectified, filtered and used to drive the RF output stage. A portion of this voltage is also fed back to the PWM and compared to the control voltage. Any error between the control voltage and the feedback voltage will cause a proportionate change in pulse width by the PWM chip. In the case of an over current situation, the output of the PWM chip is interrupted, thus limiting the maximum output current.

Activation of the generator's output may be accomplished by bipolar and monopolar footswitches or by using a handswitching accessory in one of the generator's three output jacks. All of the signals for keying at the footswitch or output jacks are isolated from the rest of the generator's circuitry by transformer coupled DC to DC converters and optoisolators. The keying signals from the optoisolators are decoded by a custom decoder and fed to one of the microprocessor's input multiplexers where final action to determine exactly what mode and which output is to be enabled.

Mode selection and power settings are done via the monopolar and bipolar keyboards. When a key is depressed, information is sent to the input multiplexer then to the microprocessor. The information decoded by the microprocessor then addresses the output multiplexer which in turn latches the appropriate mode indicators and power readouts via the display drivers.

The RF output power of the generator is set by the microprocessor which reads the power set point and generates a DC control voltage via a digital–to–analog converter. This voltage is fed to the mode multiplexer and scale adjust circuitry where the control voltage is calibrated for each individual mode of operation. The scaling modifier serves to reduce open circuit voltage during use of Precise Bipolar. From here the control voltage goes to the PWM circuitry to create the proper HV power supply voltage for the selected output power.

When the generator is keyed, the microprocessor sends signals to the output multiplexer, to the mode select logic to enable proper pulse generation. This pulse train turns the RF drive transistors on and off at

the proper rate for the selected mode of operation. Proper routing of the output power is also selected by the microprocessor and its output multiplexer by enabling the correct output select relays. These relays steer the output power to the activated output jacks.

The REM™ circuitry has two operating modes, single–pad and dual–pad. In the dual–pad mode the patient return electrode attached to the generator is used to sense the pad–to–patient impedance. This is accomplished by passing a small RF current from one pad to the other through the patient. The detection circuitry (converts the RF current into a DC voltage. This voltage is sent to an analog–to–digital converter where it read by the microprocessor.

In the single–pad mode the RF current is used to sense cord–to–pad continuity. A REM™ alarm is sounded in this mode only if impedance exceeds a preset hardware limit. REM™ alarms are created by a signal sent to microprocessors input multiplexer where it is decoded and the microprocessor sends the necessary signals to the output multiplexer to light the alert indicators (FP) and to the tone generator to sound the audible alarm.

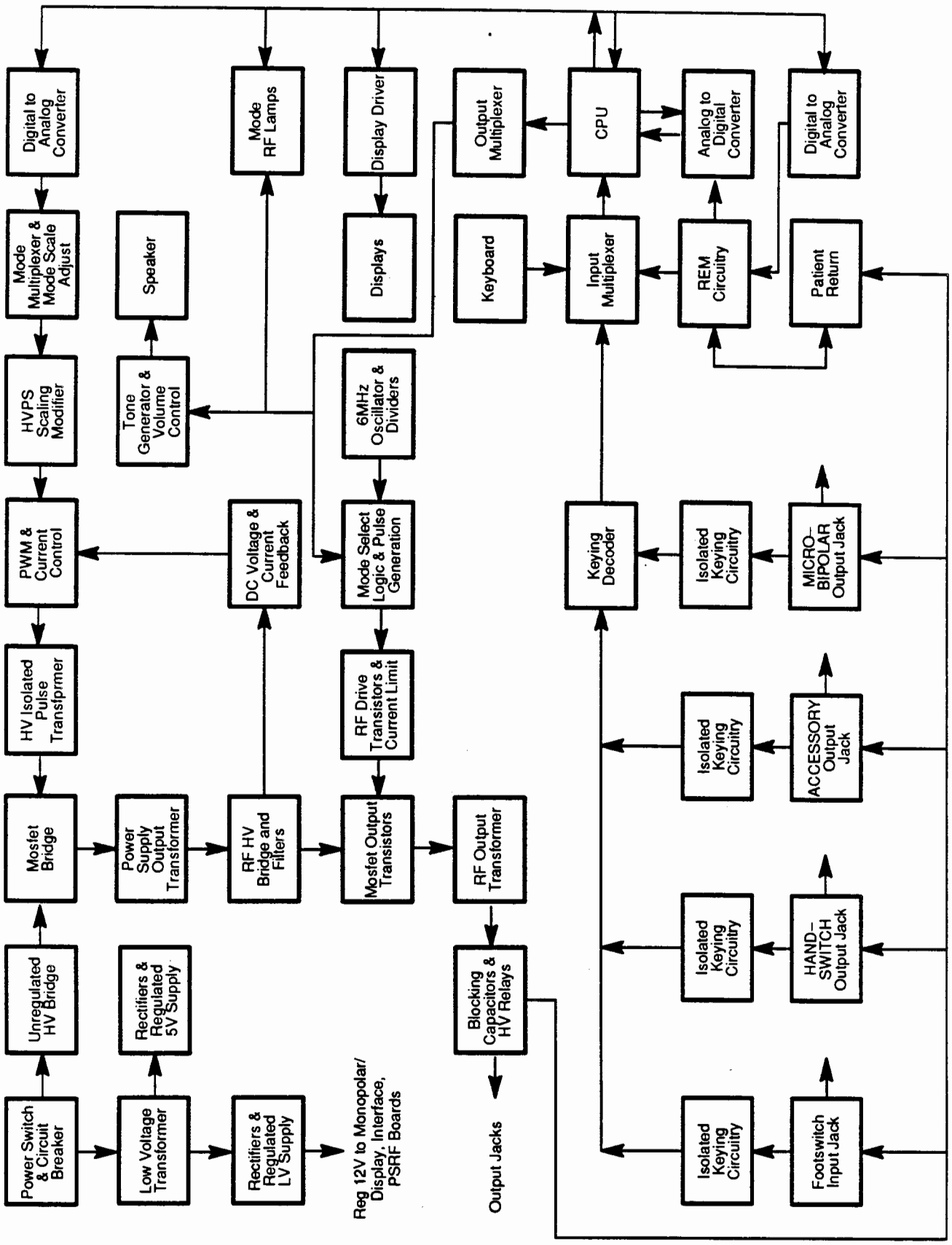

Figure 9.1 Functional Block Diagram

CIRCUIT DESCRIPTIONS

Bipolar Display Board

The Bipolar Display Board is used as the numeric display for the mode's power set point and to display the bipolar RF lamp. The signals for these indicators are derived from the multiplexed display driver on the Monopolar Display/Control Board for the former, and the latter is generated by signals from the RF circuitry.

An audio alarm is also present on this board. The frequency select for the alarm is done by circuitry on the Microprocessor Board. Volume is controlled by a potentiometer mounted on the rear panel. In the case of an alarm condition, the volume pot is bypassed and a full volume alarm is sounded. This circuitry is located on the Monopolar Display/Control Board.

Power Supply

The generator power supply is located on the main PCA. It is an off–line DC–DC switching converter operating at 80 kHz. Input power is supplied by a voltage doubler, two hold–up capacitors and four power FETs in a bridge configuration. The FETs drive the power transformer T3 primary at 320V peak and varying duty cycles. The power transformer rectified secondary voltage is filtered by a 0.75 mH inductor and two 15 µf capacitors which convert a constant amplitude variable duty cycle input to a variable DC output. Duty cycle control is performed by a 3526 IC regulator with emitter followers to drive the transformers T1 and T2 which switches the power FETs. The IC contains a sawtooth oscillator, pulse steering logic and a comparator. The error voltage on pin 1 varies from 0.5 to 3.5 volts to change the output duty cycle. The power transformer has snubber networks to limit voltage spikes.

Power supply control uses an Op Amp within the 3526 to amplify the difference between a feedback fraction of the DC output and a reference voltage ECON. The reference is generated by the CPU and scaled as the square root of the front panel power setting. There is a DC current limit implemented with a comparator and pulse stretcher. The pulse stretcher shuts down the supply's control IC for about 1/3 of a second and then soft starts the supply. An R–C network on the 3526 pin 7 provides a power–on reset.

Low voltage supplies at +12 and + 5 volts are regulated with 3 pin ICs. The raw DC is generated by a transformer, rectifier, capacitor circuit. There are no low voltage adjustments.

WARNING: THE POWER FETS AND OTHER COMPONENTS ON THE SUPPLY HEATSINK ARE AT LINE POTENTIAL. USE EXTREME CAUTION WHEN PROBING THIS CIRCUITRY.

RF Output

This circuitry resides on the main circuit board assembly and amplifies the CPU signals Ton, Toff to the level required by the front panel power setpoint. Current limiting and peak voltage limiting circuits prevent damage under extreme load conditions. Power control is done by varying the supply voltage. Both DC supply and RF current limit levels are calibrated for each mode – Cut, Coag, Blend 2 and Bipolar. The output tuning and transformer turns ratio is different for Cut and Coag waveforms and the selection is done by a relay. Eight power FETs act as RF switching elements. A current sampling resistor at the sources provides input to a current limit circuit. Gate drive is direct at a 12V level. The drains have diodes in series to allow the output transformer primary voltage to swing negative in Coag. The Cut waveform drive is at a 50% duty cycle with a 1us on time. The Coag drive waveform is generated by turning on the FETs for two microseconds every 32 microseconds.

RF control uses a set–reset flip–flop toggling at 500 kHz in Cut. The flip–flop is set by Ton and turns on the output FETs. The flip–flop is cleared by Toff or by a current limit pulse from the LM306 comparator. The current limit reference ICON is supplied by the CPU and varies as the square root of power with an offset at low powers. When peak voltage limiting occurs the reference voltage to the LM306 current limit comparator is reduced to reduce the output pulse width. At high load impedances a one shot is triggered by transformer primary voltages below –100 volts. This one–shot turns on a FET to load the output and reduce high frequency risk currents.

The FET output is rather low impedance and its voltage compliance is limited by the choice of DC supply voltage as the power control parameter. Above 300 ohms load, the output resembles a constant voltage source. Below 300 ohms load, the current limit circuitry enforces a constant current characteristic. A peak detector and comparator provide RF lamp control. The bipolar control adds an Op Amp to the power supply feedback path. This amplifies the difference between the RF output peak voltage and the power supply set point voltage. The difference is summed with the fedback supply voltage by injecting current into the feedback divider to reduce the supply under high impedance load conditions. Current injection is enabled only in the Bipolar mode.

All eight output FETS must be the same type. Check current matching in Coag by clipping a current transformer around the 0.2 ohm resistors.

Monopolar Display/Control Board

The Monopolar Display/Control PCB, hereafter referred to as the CPU card, has two major functions in the Force 2. The first is as the main control element of the generator. The second is to act as an interface between the user inputs and the generator.

In performing the first function the CPU card generates the proper RF drive per the mode selected, calculates and generates the power supply control voltage, calculates and generates the RF output stage current limit, and performs adaptive REM™ monitoring when the generator is not keyed.

In acting as the interface between user and generator the CPU board receives all operator keyboard inputs and performs the proper functional response (e.g. increment power register and display, change Cut mode, etc.). It further accepts all keying signals after they have been decoded by the Interface PCB and performs the proper algorithm to initiate the desired RF output.

The main control element on the CPU board is an 8749, a single chip microprocessor with 2k of on–board EPROM. It is this chip with its host of dedicated peripherals that performs the functional responses required of the CPU board. The actual software program within the 8749 carries the brunt of the performance requirements of the CPU card. As this is a hardware description of the card the software program will only be outlined.

The major display requirements of the CPU card are performed using an Intersil Display Multiplexer, the ICM 7218C, which is U3. The device is a universal eight digit LED driver system. Internally it contains all the circuitry necessary to interface a microprocessor to an LED display. Included on the chip is an 8 x 8 static memory array with storage for the displayed information, 7 segment decoders, all the multiplex scan circuitry, and the high power digit and segment drivers.

Consequently, the microprocessor is able to write the display information to this chip in BCD format and the display multiplexer does the rest. This stand alone feature is used for almost all of the required display systems. The RF watt lamps and the REM™ and RMOTE lamps are individually driven by microprocessor port lines.

However, the ICM7218C is not capable of driving the mode indicator lamps with sufficient power to make them fully visible through the translucent display windows. To overcome this deficiency, segment H, the decimal point drive output of the ICM7218C, is individually gated with each of the eight digit drives to externally multiplex the mode lamp indicator information. The resultant mode lamp drives are current boosted by U14, an ULN2803A, to drive the indicator LED's. The external multiplexing is done by U15 and U29.

Two digit drive lines and seven segment drive lines are bussed from the CPU card to the Bipolar Display PWB to control the bipolar display seven segment digits.

The REM™ and RMOTE lamps are not controlled by the ICM7218C. Individual microprocessor port lines are assigned to these two displays, P12 and P16 respectively, to drive these LED displays. The pull–up resistors, R14 and R17, are required to insure that the outputs of the open collector driver pull high when its inputs are low.

An additional circuit in parallel with the REM™ LED is transistor Q1, which is turned on when the REM™ light is on. This transistor shorts out the volume control potentiometer and allows the audio alarm tone to be sounded at full volume.

The audio tone frequency and its enable are both controlled by port lines of the 8749, P11 and P10 respectively. These two control lines activate an on/off analog gate which either allows audio drive to the speaker or not and a second analog gate which changes (increases) the capacitance of a one gate oscillator.

The single gate oscillator, a part of U7, is the typical R–C type circuitry recommended in the literature. However, several additions have been added to it to clarify the actual audio output. A large R–C filter, R21 and C8, has been put on the power input to U7 to completely remove all AC noise that would otherwise be transmitted as amplitude and frequency modulation superimposed on the oscillator output to the speaker creating a "warbling" effect. R31 and CR3 are added to change the duty cycle of the oscillator to fine tune the final audio output.

The output of the oscillator is current boosted by a pair of drivers in U1. The resistor R1 in series with the speaker limits the maximum audio output. The RF lamps are the only other display elements not controlled by the display driver. Each of these lamps is driven by an assigned port line of the CPU. The port line is current boosted by an open collector driver in U1. The lamps are further controlled by Q3. This transistor must be on for the RF lamps to be lit.

There are two ways that Q3 can be turned on. The first is by the CPU directly with an assigned port line, P13. This is only done at turn on when the generator performs a display test turning all of the display digits and lamps on. The second way the transistor is activated is by the RF sense line from the PSRF PCB. This line is activated whenever RF power is being generated by the unit.

The 8749 converses directly with the ICM7218C, that is, the display driver is on the CPU's data bus. For the CPU to be able to communicate with its peripherals, chip selects must be generated external to the CPU to activate that peripheral which is being either written to or read from. The falling edge of the ALE, address latch enable, line on the CPU indicates that a valid address is present on the data bus. A 74LS374, octal D–type latch, U6, is used to decode the address information into chip select signals to activate given peripherals.

The latch signal is only enabled if external memory is being addressed. This is decoded whenever either the read or write outputs of the CPU are activated by going low, the two signals are negative true. U22

performs the nor function. R2 is used to shift the read enable for the address decoder to ensure that the decoded chip select remains valid during the CPU read of the data bus. A low on an address line, the outputs of U6, is used as a chip select. Consequently, to insure that only one peripheral is addressed at a time all external memory locations have addresses with all bits high except one.

There are eight external memory locations. Three of them are read only and five are write only. One of the write only has already been discussed, the ICM7218C. The other seven locations will now be discussed with the reads covered first.

The three read locations are used to input the twenty–two user inputs. Fourteen of these are the keyboard inputs and the remaining eight are decoded keying inputs. The signals are divided logically, keying inputs, mode selection and power UP/DOWN control, and are each separately addressable. Integrated circuits, U16, U23, and U24 are used to buffer these read signals onto the CPU data bus. The devices are 74LS240's which are octal–inverting data bus drivers with tri–state output capability. Using the chip selects generated by U6 to control the output enable of these devices makes a convenient way of placing them on the CPU data bus.

Two eight bit DACs are on the data bus. They are configured as write only devices. One of these circuits, U26, is used to generate the power supply control voltage, ECON, and the other, U25 is used to generate the RF current limit analog voltage ICON.

The outputs of the two DACs are inverted, amplified with a gain of one, inverted again, and amplified again with a gain of two; giving the final output range of the two analog signals of 0 to 5 volts. The amplifiers are all contained in a Quad Op. Amp chip, U27. Various capacitors (e.g. C29, C41) are used to limit RF interference.

The fourth write only location is dedicated to U5, an eight bit parallel, in–serial out shift register, 74LS165, whose output is used to gate the principal RF clock frequency to generate the final RF drive waveshape. How this is done will be explained later.

The final write location is a 74LS374, U17, an octal D–type latch, which is used in the keying circuitry. The actual explanation will be taken up later.

To generate the 6MHz clock requirements of the 8749 a crystal is used. The output is inverted and drives the clock inputs for the CPU.

The write pulse generated by the CPU is not able to meet all of the timing requirements of the various peripheral circuits. Consequently, U13 is used to phase shift and shorten the pulse width with respect to ALE. The output of TO is internally programmed to be 2 MHz. The resultant output is then ORed with various peripheral chip select lines to generate the required write pulses for these circuits.

The RF on and off drive generation: U28 is used to divide the crystal frequency from 6MHz to 500 kHz. One half of U9 is configured as a toggle flip–flop to further divide the clock to 250kHz. The two analog gates of U10 are used to select the on/off drive frequency of the RF drive pulse trains. The selection is controlled by microprocessor port line P15.

The clock is then steered to a three input AND gate, U11, dedicated to RF Ton, the on drive. RF Toff, the off drive, is the inversion of RF Ton. The clock is ANDed with the serial output of the shift register U5. R35–C29 are used to account for timing skews on the clock generation circuitry. R36–C6 are required to stop RF interference from entering the shift register.

The output signal of the AND gates are the drive pulses. Since the 8 bit shift register is cyclically loading itself while data is being shifted out the drive frequency of modulation is 250/8 = 31.25 kHz. To avoid RF

interference problems with the CPU when the generator is keyed the microprocessor shuts itself off by setting the flip–flop in U9. This is clocked at power up to allow the CPU to run.

Two things can reset this flip–flop, a REM™ fault occurs or the keying input configuration changes. The Q output of this flip–flop is the third input to the enable AND gates for RF drive. Consequently, RF drive trains, and therefore RF, are only generated when the CPU is shut off.

The 8749 is shutdown by pulling the input single step line to ground. When this occurs ALE is no longer generated and port two's lower nibble is configured to show the upper nibble of the CPU address. To keep the CPU board I/O constant when the CPU is shutdown, U4, a 74LS374 is used to latch port two information. When ALE is halted the chip has latched the last port two I/O configuration.

With this knowledge it can be discerned that the auxiliary CPU board keying circuitry has to be able to detect several unique conditions, no keying input and/or a change in keying inputs, and REM™ fault.

REM™ fault is detected on the interface board and is merely an input line to the CPU board. Q4 is required to ignore the REM™ fault line when the unit is in bipolar mode. U20 is used to detect when there are no keying inputs. U17 in combination with U18 and U19 detects a keying input change.

The way the latter is done is that the CPU writes to the 74LS374, U17, the present keying configuration. The two bit magnitude comparators constantly compare this keying configuration to the decoded outputs from the Interface PWB. If the two are not the same U19 pin 6 will go low, with R23–C13 providing time delay and moderate RF filtering to this line. This signal is then gated with the no keying signal from U20 and the REM™ fault line from the Interface PWB to generate the reset signal for the CPU single step flip–flop.

This circuit assembly is mounted vertically at the front panel shield. It contains the patient circuit generator functions: keying, output jack selection and patient return electrode monitoring. This assembly has isolated, high voltage, patient connected circuitry, and component replacement must be done with exact equivalent parts.

The keying circuits comprise an isolated power source, comparators to detect switch closure and optical couplers. The power source is two flyback converters and toroid transformers. The handswitch circuits use three comparators to sense active to Cut, active to Coag, Cut to Coag, and active to Cut to Coag connections. These codes for Cut, Coag, increase power and reduce power, respectively. The remaining keying circuits simply have resistors in series with the opto–couplers to limit current. There are four isolated circuits, each with its own transformer winding for power.

This generator has three possible RF output jacks. Selection of the jack is done by single pole, normally open, high voltage relays. The CPU turns on the relays via bipolar drivers on the Interface PCB. A CPU controlled delay between relay closure and initiation of RF drive reduces contact wear. Note the 0.0047 microfarad capacitors in series with the RF output and return. These are the primary patient protection against electrocution and must be high voltage parts.

The REM™ circuitry measures the pad–to–pad resistance of dual–pad patient return electrodes or the wiring resistance of single–pad patient return electrodes. A microswitch in the connector is opened for REM™ patient return electrodes and selects one of two alarm signal paths in the alarm logic string. Resistance is measured as the load on the REM™ transformer secondary. The secondary is resonated by two 0.22 microfarad capacitors and the reflected primary load is sensed by a synchronous detector. Four clocked CMOS switches perform synchronous detection. The oscillator is tuned to the transformer

by a pot. The detector output is amplified and input to four comparators. Two comparators provide hard–wired alarm limits at 5 and 135 ohm alarm limit for REM™ patient return electrodes. The third comparator provides a hard–wired alarm limit at 20 ohms for single–pad electrodes. The fourth comparator generates a pulse width modulated waveform by comparing the REM™ resistance to a triangle wave generated by an oscillator. This pulse width is decoded by the CPU to implement the adaptive REM™ feature for dual–pad resistances between 5 and 135 ohms.

SECTION 10
TESTING AND CALIBRATION

This section contains the procedures to functionally test and calibrate the Force 2 Electrosurgical Generator.

RECOMMENDED TEST EQUIPMENT

Tektronix type 465 Oscilloscope
Tektronix type P6013 High Voltage Probe
Tektronix type P6007 X100 Probe
Tektronix type P6010 X10 Probe
Decade Resistor Box 0–250 ohm
Fluke 8010A Multimeter
Fluke 1900A Multicounter
* Fluke 8920A True RMS Voltmeter
* Pearson Electronics Model 411 Wide Band Current Transformer
* Simpson Model 1339 RMS RF Ammeter 0–250 mA
* Dale Non–inductive Resistor 300 ohm, 250 W
* Dale Non–inductive Resistor 100 ohm, 250 W
Dale Non–inductive Resistor 1 ohm, 50 W
* AAMI Low Frequency Leakage Load
Tektronix type P6021 Current Probe and Termination
* Dale Non–inductive Resistor 50 ohm, 250 W
REM™ and non–REM™ Patient Return Electrode Connectors
Alignment Tool

* Commercially available Electrosurgical Analyzers and Low Frequency Current Testers may be used in place of these items. (e.g. Test Set Electrical Surgery NSW6625–01–042–8213 and Tester, Current, Leakage NSW6625–01–142–8233)

PREVENTATIVE MAINTENANCE

In order to insure safe and dependable operation, the Force 2 system should be checked every 6 months to confirm that the unit meets minimum specifications. If the Force 2 does not meet the following minimum requirements, please refer to the Calibration or Troubleshooting Procedures or replace the physically damaged component.

WARNING: The electrosurgical generator contains hazardous voltages. High voltage is present on the power connector, power switch and the aluminum heatsinks on the RF Power Supply Board.

CAUTION: The electrosurgical generator contains static–sensitive devices. Open chassis only at a static free work station. The technician shall wear an ESD wrist strap while working within the chassis.

Observe Electrostatic Discharge (ESD) control procedures when working within the electrosurgical generator.

Use the generator chassis as reference ground. Select ground points to avoid ground–loop errors.

When testing RF equipment, proper testing procedures must be followed in order to duplicate factory test data. Keep test leads as short possible. Lead inductance and stray capacitance can effect meter readings adversely.

Meter accuracy of RF test equipment is 5–10% of full scale. Using uncompensated scope probes may cause large errors in the measurement of high voltage RF waveforms. When fractional microampere leakage currents are measured, accidental capacitance or inductance coupling may cause order–of–magnitude errors in the observed values.

PRETEST INSPECTION

Front Panel

1. Check the following front panel receptacles for damage or corrosion:
   a. MICROBIPOLAR
   b. MONOPOLAR ACCESSORY
   c. MONOPOLAR HAND–SWITCH
   d. PATIENT

2. Using a banana jack, check each connector for obstruction and secure fit. Use a 1/4" jack (Universal Active Adapter) in the footswitching ACCESSORY receptacle and check for a secure fit. If the connections are loose, replace the staked control panel assembly.

3. Check the PATIENT receptacle for damaged or bent pins. Check the center REM™ connection for a broken pin or obstruction.

Rear Panel

1. Check that the rubber vibration mounts are in place on the rear and base of the generator.

2. Visually check the following for damage or corrosion:
   a. ON/OFF switch
   b. Volume control
   c. Monopolar Footswitch Connector
   d. Bipolar Footswitch Connector

3. Remove the fuse and inspect fuse housing and cap for damage or corrosion.

4. Verify that the rear panel fuse is a 250V, 1 amp fast–blow.

5. Install fuse and check for secure fit.

6. Remove the power cord retaining bracket and power cord.

7. Disassemble the power cord connector and inspect for damage or corrosion. Ensure that connector screws are tight.

8. Assemble power connector and inspect power cord for damage.

9. Verify that power cord connector is Hospital Grade (green dot).

10. Clean power cord with a damp cloth and mild detergent.

Chassis Inspection

1. Remove top cover.
2. Remove PCB cover from the heatsinks.
3. Use 9 to 15 psi air to remove dust and debris from the chassis. Use a small brush to dislodge debris.
4. Visually inspect each board for damaged components, wires, cracks and corrosion.
5. Check that all connectors are fully seated.
6. Re–install PCB cover.
7. Install the top cover.
8. Wipe top cover and control panel with a damp cloth moistened with a mild detergent.
9. Install power cord assembly and secure with bracket and two screws.

POWER–UP SELF TEST

1. Connect a footswitch to the generator.
2. Plug the generator power cord into a hospital grade, grounded receptacle.
3. Place the power switch to the ON (1) position.
4. The generator will conduct a self test. Check the following:

   a. The keying signal tone will sound.

   b. All digital display segments light (all "8"s).

   c. Mode, alert and power indicator lamps are illuminated.

   d. In five to seven seconds, the electrosurgical generator will enter the Standby mode and the digital displays will show dashes (– – –).

5. Press the READY button to place the generator into service. Check the following:

   a. Each digital display indicates 1 watt.

   b. The MONOPOLAR footswitch indicator will be illuminated.

   c. PURE CUT indicator will be illuminated.

MONOPOLAR OUTPUT POWER TEST

1. Set up test equipment as shown in Figure 10.1 to test radio frequency output power.

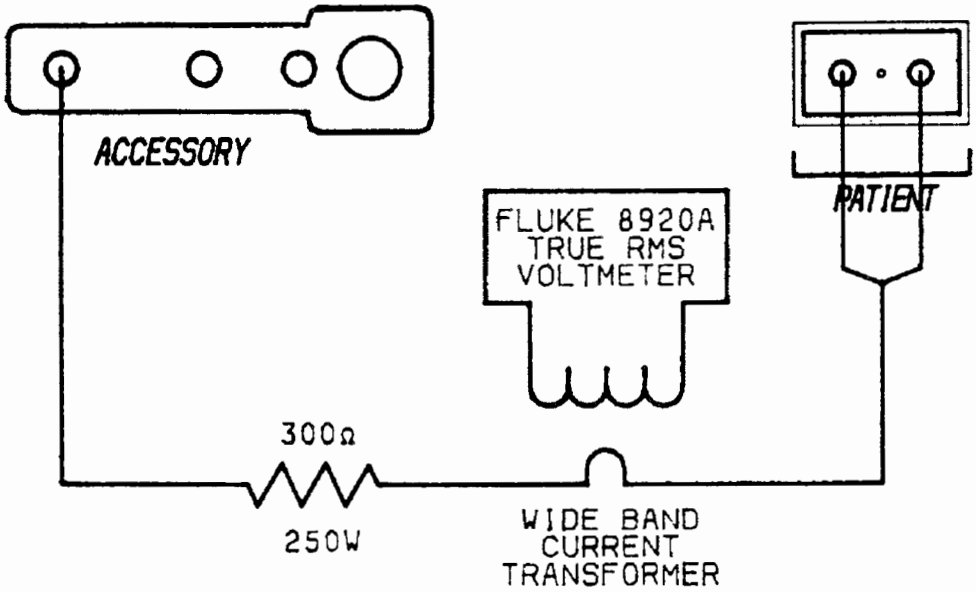

Figure 10.1 Monopolar Output Test Circuit

Note: If commercially available test equipment is used, please refer to set–up instructions for test from the test equipment manufacturer.

Note: Output power vs. display will be ± 15%.

2. Set Coag power to 50 watts. Key Coag and verify proper output.

3. Set Coag power to 120 watts. Key Coag and verify proper output.

4. Set Pure Cut power to 50 watts. Key Pure Cut and verify proper output.

5. Set Pure Cut power to 300 watts. Key Pure Cut and verify proper output.

6. Set Blend 2 to 50 watts. Key Blend 2 and verify proper output.

7. Set Blend 2 to 200 watts. Key Blend 2 and verify proper output.

BIPOLAR OUTPUT POWER TEST

1. Set up test equipment as shown in Figure 10.2.

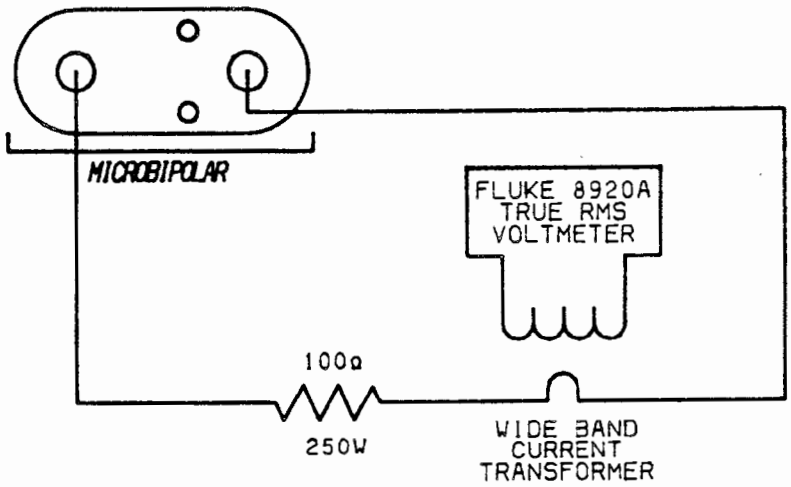

Figure 10.2 Bipolar Output Test Circuit

Note: Output power vs. display will be ± 15%.

2. Set MBP power to 70 watts. Key Bipolar and verify proper output.

REM™ CONTACT QUALITY MONITORING SYSTEM TEST

1. Install a REM™–type connector and variable resistor as shown in Figure 10.3 to the PATIENT receptacle.

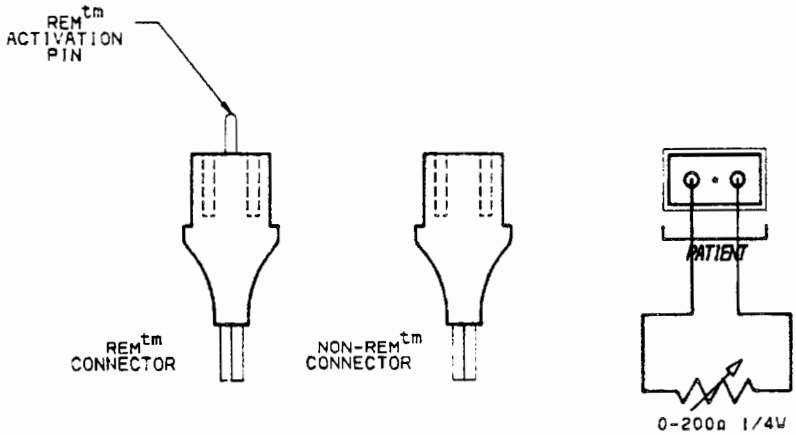

Figure 10.3 REM™ Test Circuit

2. Set resistance to 150 ohms. REM™ alert lamp should be illuminated.

3. Decrease resistance to 100 ohms. REM™ alert lamp should go out.

4. Decrease resistance to 0 ohms. REM™ alert lamp should again be illuminated and audio alarm should sound twice.

5. Remove REM™–type connector and replace with a non REM™–type connector.

6. Set variable resistance to 5 ohms. Note that the REM™ lamp is off.

7. Increase resistance to 30 ohms.

8.. The REM™ alert lamp should illuminate and the audio alarm should sound twice.

LINE FREQUENCY (50/60 Hz) CURRENT LEAKAGE TEST

This test measures potentially dangerous 50/60 Hz leakage currents.

1. Set up the test circuit as shown in Figure 10.4.

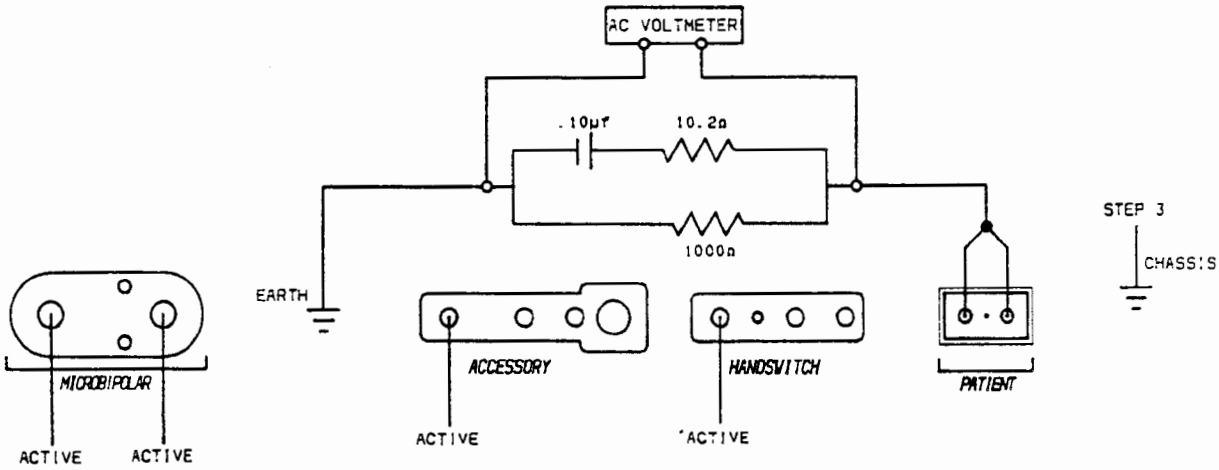

Figure 10.4 50/60 Hz Leakage Test Circuit

Note: If commercially available test equipment is used, please refer to set–up instructions for test from the test equipment manufacturer.

2. Connect a 0.10 µf capacitor across a 1K ohm resistor. This will remove any trace of high frequency noise generated by the oscillator inside the unit. (This capacitor has little effect on the 50/60 Hz leakage current.)

3. Measure the current from each front panel jack by observing the voltage developed across the 1K ohm resistor to ground. Leakage current is calculated from I = E/R, where R = 1K ohm and E is the voltage measured across the resistor.

The maximum acceptable voltage across the 1K ohm resistor for 2.0 microamperes leakage is 0.002 volts (2 millivolts).

NOTE: Because of the extreme difference in magnitude of the 50/60 Hz leakage current in the RF signals when the generator is activated, there can be as much as 9000 volts peak–to–peak compared to

20 millivolts of 50/60 Hz. This ratio (110 db) of voltages would require the use of sophisticated measuring techniques. In practice, the 50/60 Hz leakage currents do not change significantly when the unit is keyed.

4. Third wire leakage current is measured by opening the green grounding wire at the plug and connecting the 1K ohm resistor from chassis to ground. The maximum voltage across the resistor for 100 microamperes leakage should be 100 millivolts.

CHASSIS GROUND INTEGRITY TEST

Check for the existence of a low impedance between the generator chassis handle and the third wire ground pin at the end of the power cord assembly. To avoid problems with contact resistance when measuring this impedance (0.1 ohm) it is recommended that a four–wire resistance measuring technique be used.

CALIBRATION

Note: A Valleylab E3002 Analyzer should not be used to perform the calibration.

The best performance will be obtained if each adjustment is made to the exact setting. If substitute equipment is used, it must meet, or exceed the specifications of the recommended equipment. Also, all calibrations listed in the procedure are made at the factory before the generator is accepted by Quality Assurance. If only RF output power needs to be re–calibrated, proceed directly to step six of the procedure.

NOTE: RF power should be measured with the cover ON.

Special care must be taken in Step 4. The 100X probe to be used should be closely calibrated with the oscilloscope to be used.

Calibration Procedure

1. Remove the cover from the Force 2 to expose the internal controls and test points.

2. a. +12 Volt Supply: Connect the digital multimeter between pins 5 or 6 and pins 1 or 2 on the 40–pin interconnect cable. The meter should read +12 ± .3 volts.

   b. +5 Volt Supply: Connect the digital multimeter between pins 3 or 4 and pins 1 or 2 on the 40–pin interconnect cable. The meter should read +5 ± .25 volts.

   c. –5 Volt Supply: Connect the digital multimeter between pin 7 and pins 1 or 2 on the 40–pin interconnect cable. The meter should read –4.75 ± .2 volts.

3. Remove the high voltage warning cover from the Power Supply/RF Board.

Special caution should be used when working on the exposed high voltage board as the heatsinks and many of the components are floating at potentially harmful voltage potentials. Use the 1/4" footswitching ACCESSORY receptacle for generator output.

4. Adjust the High Voltage Clamp:

   a. Set the Coag display to 30 watts.

   b. Attach a 300 ohm load from the generator output to the PATIENT receptacle.

c. Key generator in Coag. Output power should be 30 ± 5 watts.

d. Remove the 300 ohm load.

e. Adjust the Coag display to 1.

f. Attach an oscilloscope with a 100X probe between the anode of CR3 and ground. Key the generator in Coag. Slowly increase the Coag power display and observe the peak positive voltage. Adjust R29 on the PSRF Board so that the maximum peak voltage is 400 volts. Do not let the peak voltage exceed 425 volts while making this adjustment.

5. Pure Cut Output Calibration

a. Attach a 300 ohm load to the generator output.

b. Set R93 to mid–setting. Turn ICON R89 fully clockwise.

c. Set Cut display at 300 watts and adjust R93 for 300 watts output in Pure Cut.

d. Change wattmeter load to 100 ohms. Turn R89 counterclockwise to mid–setting.

e. Adjust R89 for 260 ± 40 watts output in Pure Cut.

6. Blend Mode Output Calibration

a. Attach a 300 ohm load to the generator output.

b. Set ECON R94 to mid–setting. Turn ICON R90 fully clockwise.

c. Set Cut power display to 200 watts and adjust R94 to 200 watts output in Blend 2.

d. Change wattmeter load to 100 ohms. Turn R90 counterclockwise to mid–setting.

e. Adjust R90 for 150 ± 50 watts output in Blend 2.

f. Without adjusting R94 and R90, confirm that Blend 1 and Blend 3 are within specifications at a 300 ohm load. If not, fine adjust R94 and R90.

7. Coag Output Calibration

a. Attach a 300 ohm load to the generator output.

a. Set ECON R95 to mid–setting. Turn ICON R91 fully clockwise.

b. Set Coag display at 120 watts and adjust R95 for 120 watts output in Coag.

c. Change wattmeter load to 100 ohms. Turn R91 to mid–setting before proceeding.

d. With Coag display at 120 watts, adjust R91 for 100 ± 20 watts output in Coag.

8. Bipolar Output Calibration

a. Attach a 100 ohm load to the generator output.

b. Set R92 to mid–setting. Turn R88 fully clockwise.

c. Set the Bipolar display at 70 watts and adjust R92 for 70 watts output.

d. Adjust R88 counterclockwise until it affects the Bipolar output at 70 watts. Subsequently, rotate R88 clockwise one turn.

9. REM™ Calibration

a. Connect a variable resistance across the PATIENT terminals using a REM™ type connector. Set the resistance to 135 ohms. Access test points on the REM™ PCBA.

b. Adjust R73 for the highest possible voltage on TP3.

c. Turn R74 counterclockwise until EREM is below 4 volts. Turn R74 clockwise until REMFT on TP1 goes high (5V).

d. Monitor REM PW (TP4) and adjust R75 until one period of square wave is 10 mS ± .5 mS.

e. Decrease the resistance to 50 ohms. Increase the resistance gradually and record the value at which the REM™ alarm turns on (70 ± 10 ohms).

f. Decrease the resistance and note that the REM™ alarm again turns off. Decrease the resistance and note that the REM™ alarm again turns on (5 ± 2 ohms).

g. Connect a variable resistance across the PATIENT terminals using a non–REM™ type connector. Set the resistance to 5 ohms.

h. Note that the REM™ alarm is off. Gradually increase resistance and record the value at which the REM™ alarm turns on (< 20 ohms). The REM™ alarm should remain off below this value and turn on again if above this value.

ALL WAVEFORMS SEEN ACROSS A 300 OHM LOAD
HORIZONTAL SENSITIVITY – 10µs/cm
VERTICAL SENSITIVITY – 500V/cm

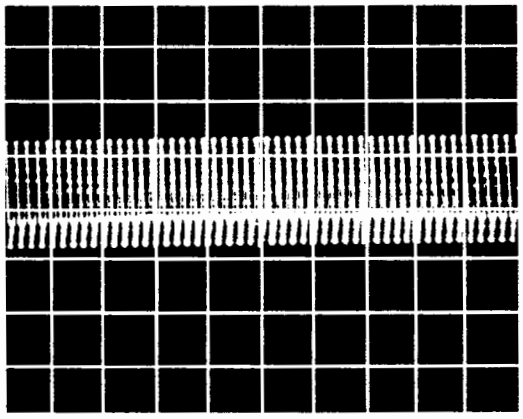

CUT @ 300W

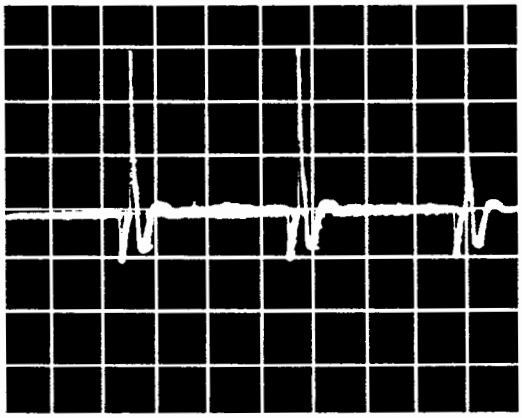

COAG @ 120W

Figure 10.5 Monopolar Output Waveforms

BLEND 1 @ 250W

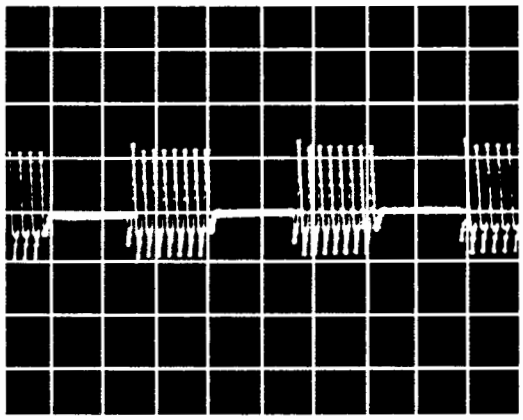

BLEND 2 @ 200W

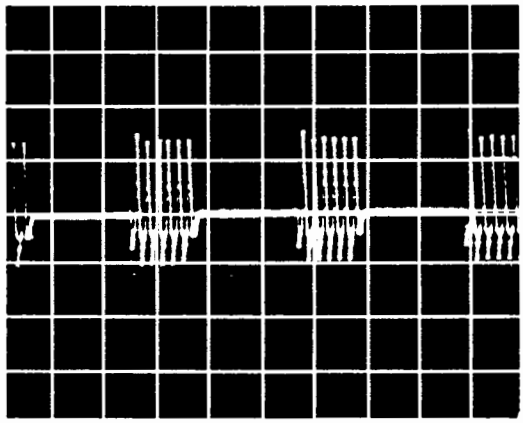

BLEND 3 @ 150W

LOW VOLTAGE COAG @ 99W

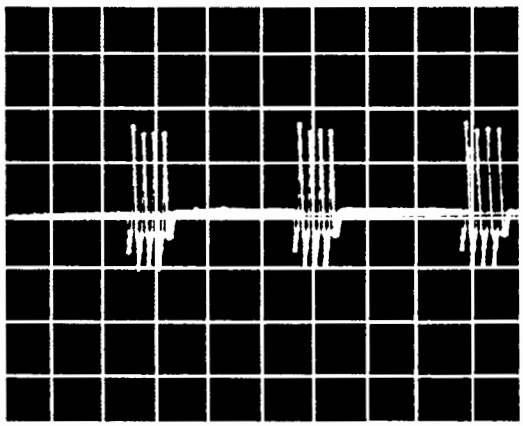

Figure 10.5 Monopolar Output Waveforms (Continued)

TOP VERTICAL = 100V/DIV
BOTTOM VERTICAL = 1A/DIV
HORIZONTAL = 1μ S/DIV

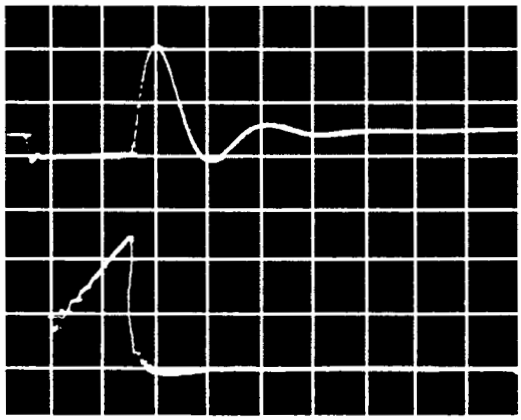

COAG @ 30W

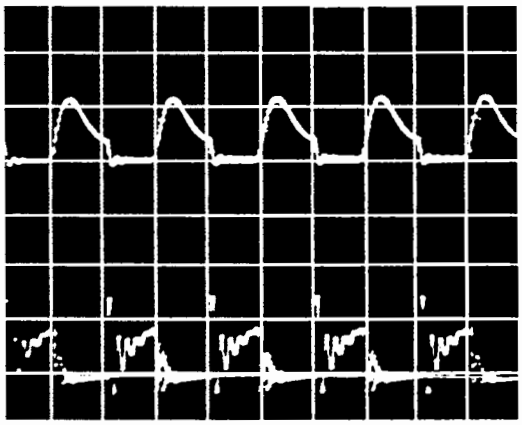

CUT @ 75W

Figure 10.6 Output FET Voltage and Current

VERTICAL = 10V/DIV
HORIZONTAL = 5 µS/DIV

COAG

TOP TRACE – Ton
BOTTOM TRACE – ToFF

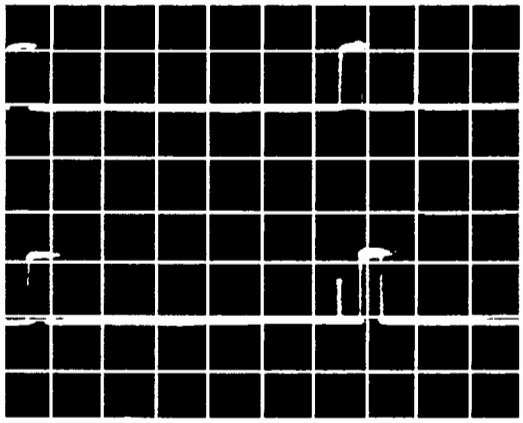

BLEND 3

TOP TRACE – Ton
BOTTOM TRACE – ToFF

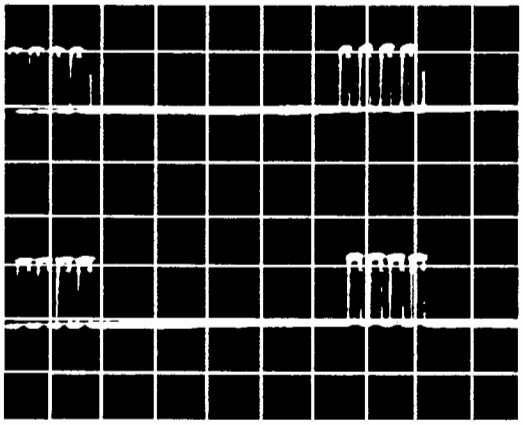

Figure 10.7 RF Output FET Gate Drive Waveforms at Q18 and Q19 Drains

TOP VERTICAL = 10V/DIV
BOTTOM VERTICAL = 10V/DIV
HORIZONTAL = 10µS/DIV

U7, Pin 16

CURRENT IN L2

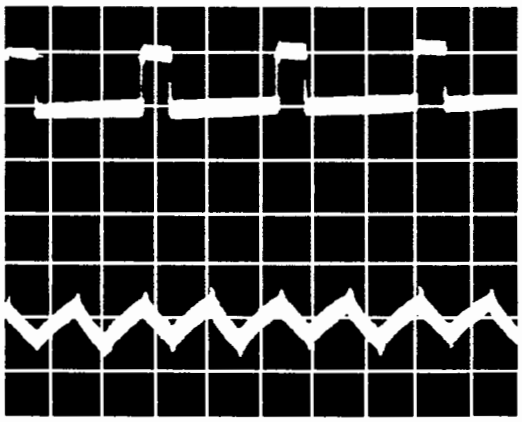

TOP VERTICAL = 10V/DIV
BOTTOM VERTICAL = 10V/DIV
HORIZONTAL = 0.5µS/DIV

Q1 – 8 GATES

U3, Pin 7, RF
CURRENT LIMIT
CONTROL

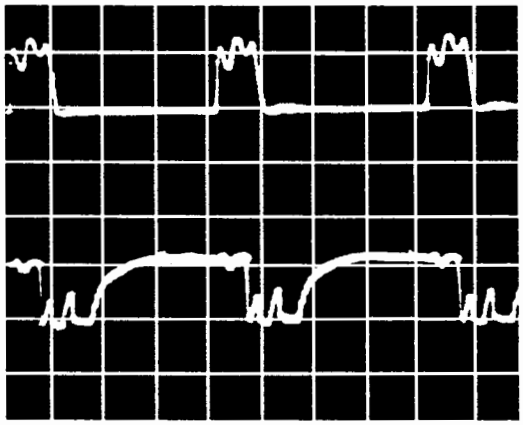

Figure 10.8 Power Supply and RF Current Limit Waveforms

SECTION 11
TROUBLESHOOTING

WARNING: The electrosurgical generator contains hazardous voltages. High voltage is present on the power connector, power switch and the aluminum heatsinks on the RF Power Supply PCBA.

CAUTION: The electrosurgical generator contains static–sensitive devices. Open only at a static–free work station. Technicians shall wear an ESD wrist strap while working within the chassis.

1. Connect a footswitch to the generator.

2. Plug the generator power cord into a hospital grade grounded receptacle.

3. Place the power switch to the ON (1) position.

4. The generator will automatically conduct a self test.

POWER–UP SELF TEST FAILURE ..... FIGURE 11.1

5. Check the following during the self test:

   a. Check that all digital display segments light (all "8"s).

   b. Check that the power indicator lamps (WATTS), mode indicators and alert lamps illuminate. If not, check the lamp circuits on the Monopolar Display/Control PCBA and/or the Bipolar Display PCBA.

   c. In five to seven seconds the generator will enter the Standby mode and the digital displays will show dashes.

6. Press the READY button.

7. Check that each digital display indicates 1 watt.

8. Check that the Monopolar Footswitch indicator is illuminated.

NOTE: If the self test does not complete the routine correctly, replace the Monopolar Display/Control PCBA.

11. Select Pure Cut and set output power at 150 watts.

12. Check that the output power is 150 watts at the active terminal of the ACCESSORY or HAND–SWITCH receptacle.

If there is no output power from the generator, first re–check the test equipment connections.Output failures are caused by two different problems. To determine whether the problem is in the keying circuit or the PSRF stage:

13. Disconnect test equipment from the PATIENT receptacle. Try to activate Pure Cut with a handswitch or footswitch. If a REM™ alarm sounds, the keying circuit is good and the problem is most likely in the RF output stage.

MONOPOLAR OUTPUT FAILURE ..... FIGURE 11.2

14. If the REM™ alarm does not sound, then the problem is probably in the keying circuit.

MONOPOLAR FOOTSWITCHING FAILURE ..... FIGURE 11.3

MONOPOLAR HANDSWITCHING FAILURE ..... FIGURE 11.4

15. If Monopolar outputs are present and Bipolar output is not, refer to,

BIPOLAR FOOTSWITCHING/FORCEPS FAILURE ..... FIGURE 11.5

16. If the generator fails to key because of a constant REM™ alarm, or there is no REM™ alarm during a REM™ fault condition, refer to,

REM™ ALARM FAILURES ..... FIGURE 11.6

Self test fails to start on generator power–up

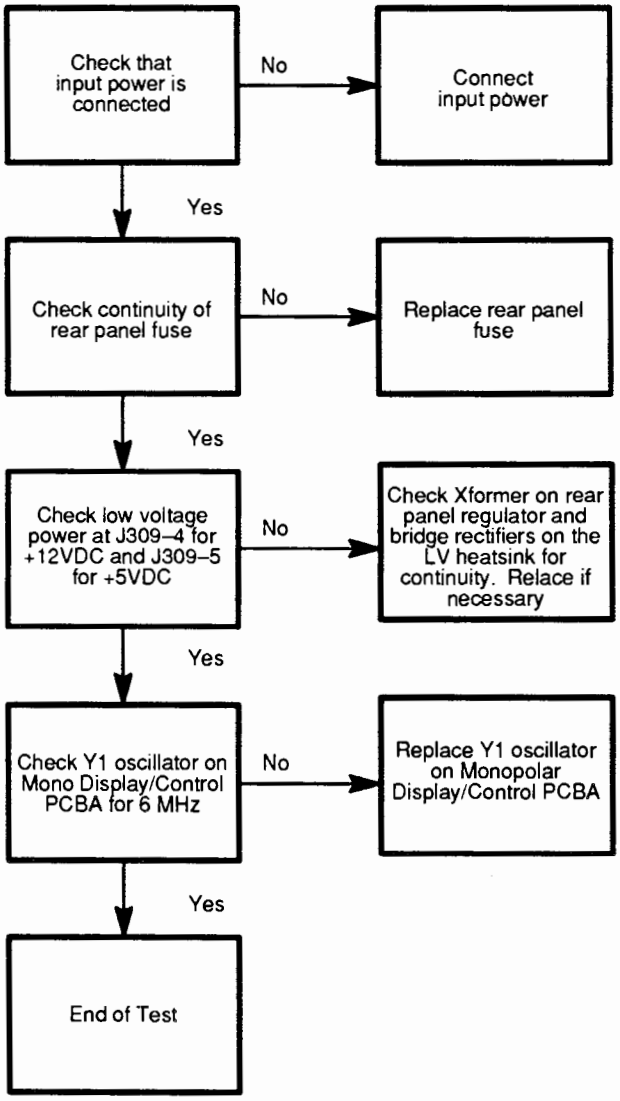

Figure 11.1 Power Up Self Test Failure

No output is generated in Pure Cut mode set at 150 watts

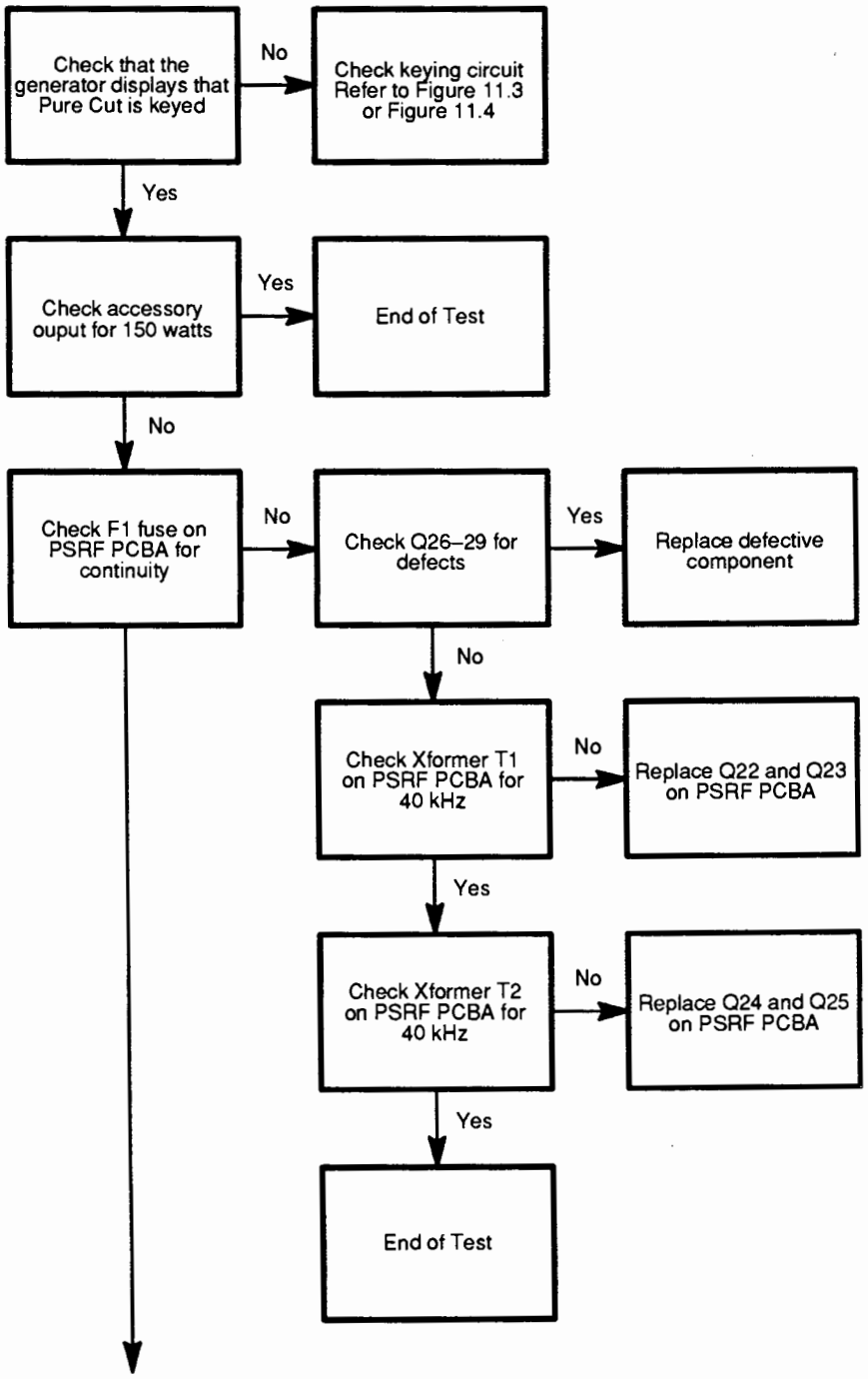

Figure 11.2 Monopolar Output Failure

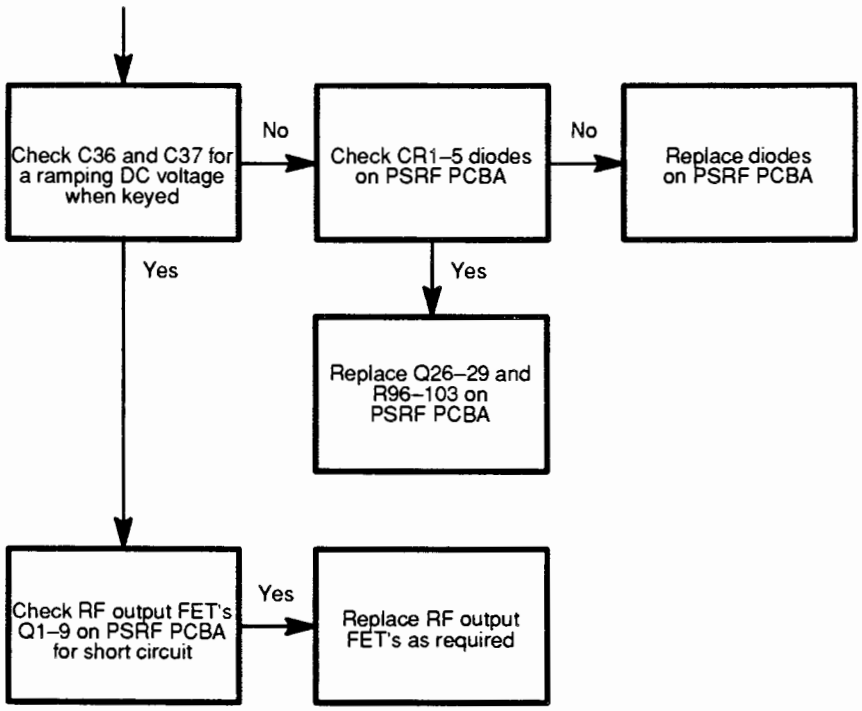

Figure 11.2 (Continued)

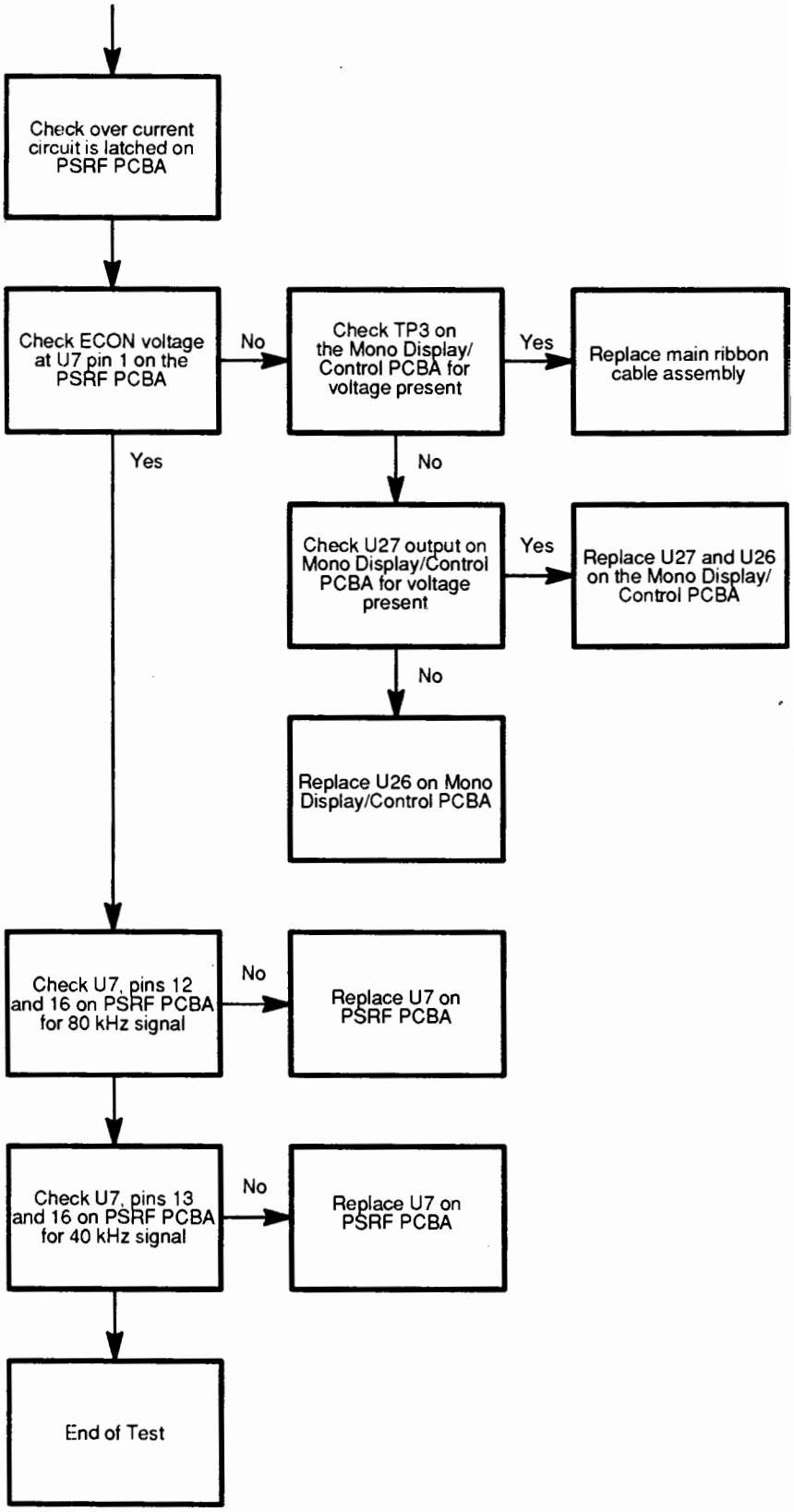

Figure11.2 (Continued)

Unit does not activate footswitching output in Cut, Coag or Bipolar with footswitch

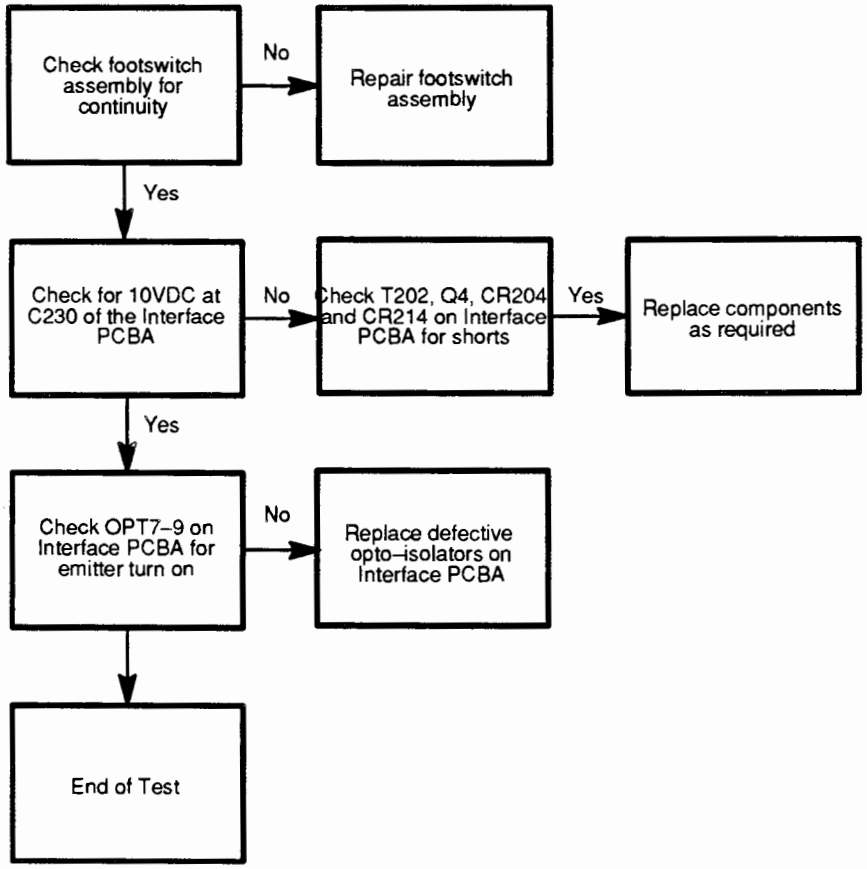

Figure 11.3 Monopolar Footswitching Failure

Unit does not activate handswitching outputs in Cut or Coag with handswitch

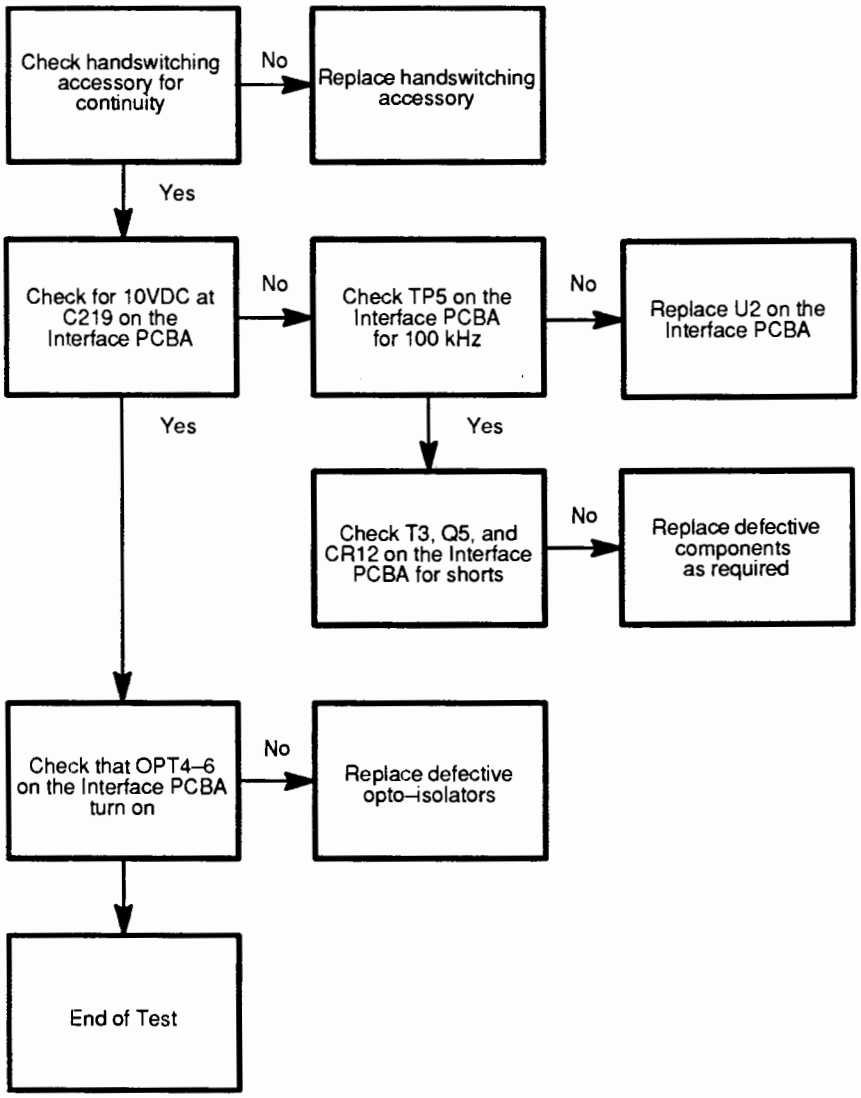

Figure 11.4 Monopolar Handswitching Failure

Unit does not activate with bipolar switching forceps

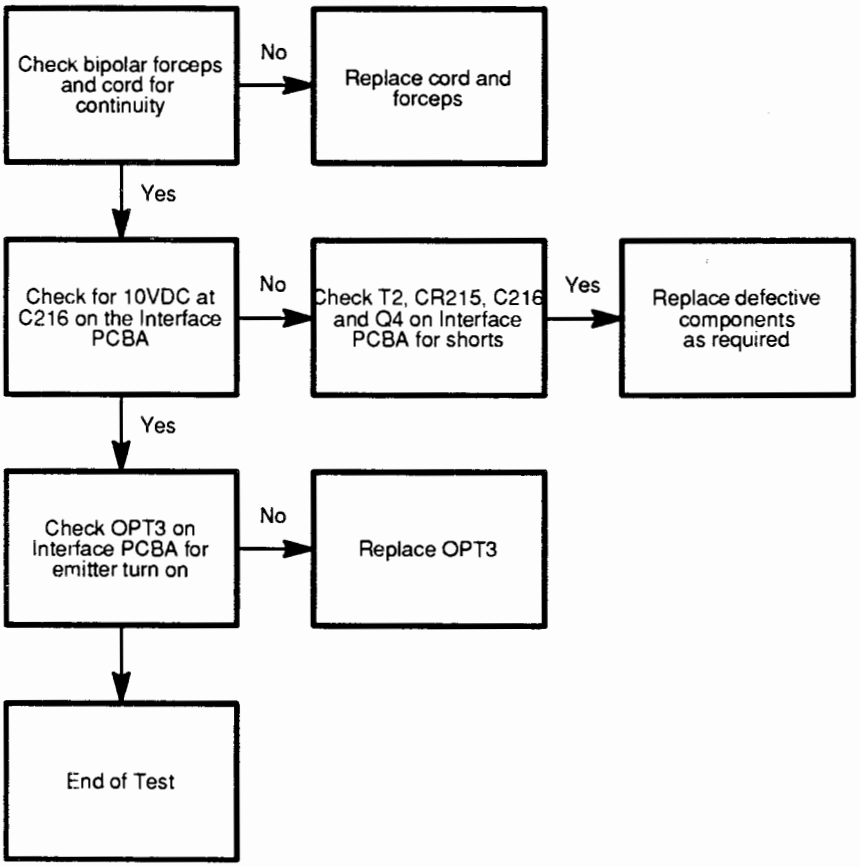

Figure 11.5 Bipolar Footswitching/Forceps Failure

No or constant REM™ Alarm

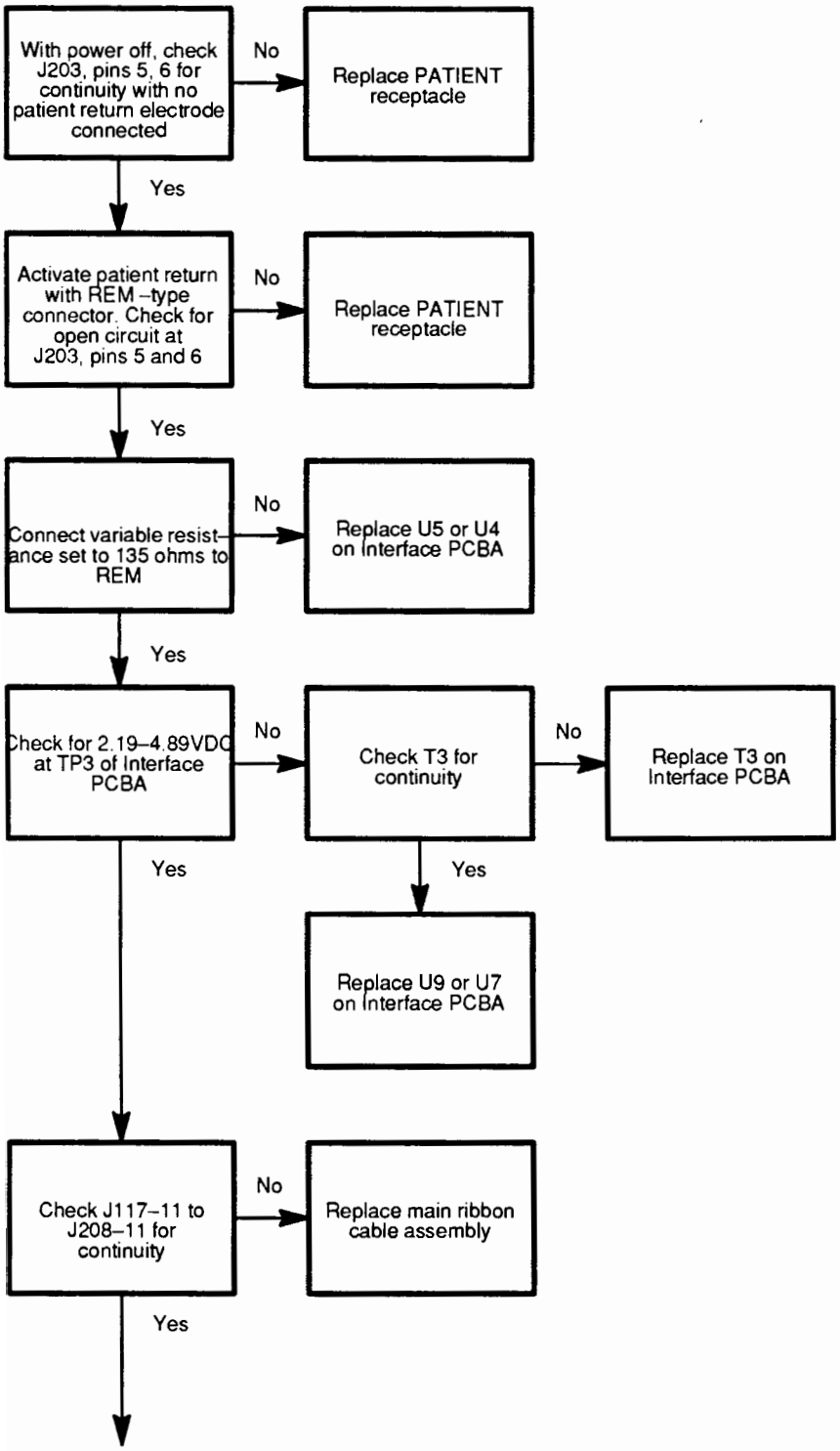

Figure 11.6 No or Constant REM™ Alarm

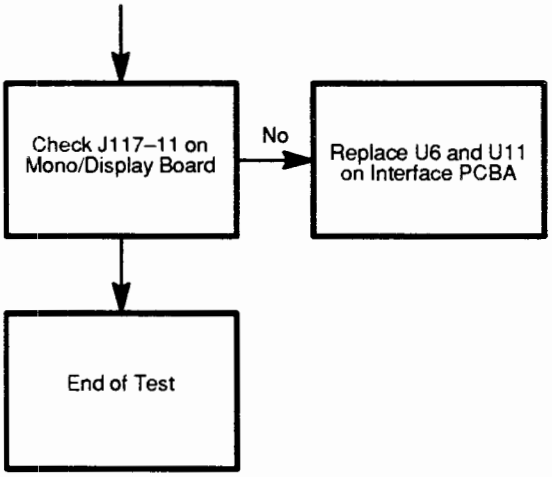

Figure 11.6 (Continued)

INTERCONNECT LISTING

J200, P800
1 HANDSWITCH ACTIVE
2 HANDSWITCH COAG
3 HANDSWITCH CUT

J201, P801
1 ACCESSORY ACTIVE
2 ACCESSORY COAG
3 ACCESSORY CUT

J202, P802
1 BIPOLAR OUT 1
2 BIPOLAR SWITCH
3 BIPOLAR OUT 2

J202, P1103
1 REM SWITCH 1
2 REM SWITCH 2
3 N.C.
4 N.C.
5 REM RETURN 1
6 REM RETURN 2

P204, J304
1 MONOPOLAR RF
2 N.C.
3 RF RET

J205, J305
1 BIPOLAR RF 1
2 BIPOLAR RF 2

J206, P1106
1 MONOPOLAR FTSW CUT "D"
2 MONOPOLAR FTSW COAG "A"
3 MONOPOLAR FTSW COMMON "C"
4 BIPOLAR FTSW COMMON "C"
5 BIPOLAR FTSW DESICCATE "A"
6 FOOTSWITCH GROUND "B"

P309, J309
1 +5V FILTER CAP
2 +12V FILTER CAP
3 LO V RETURN
4 +12V
5 +5V

J208, P1108 – J316, P1116 – J1117,P1117
1 DIGITAL GROUND
2 DIGITAL GROUND
3 +5 VOLTS
4 +5 VOLTS
5 +12 VOLTS
6 +12 VOLTS
7 –5 VOLTS
8 ANALOG GROUND
9 ECON VOLTAGE
10 ICON VOLTAGE
11 REM FAULT
12 RF SENSE
13 N.C.
14 N.C.
15 VOLUME
16 VOLUME
17 N.C.
18 N.C.
19 BIPOLAR ENABLE
20 CUT ENABLE
21 COAG ENABLE
22 BLEND ENABLE
23 BIPOLAR RELAY
24 HANDSWITCH RELAY
25 ACCESSORY RELAY
26 CUT RELAY
27 REM PULSE WIDTH
28 N.C.
29 HANDSWITCH CUT
30 HANDSWITCH COAG
31 HANDSWITCH U/D
32 ACCESSORY SWITCH CUT
33 ACCESSORY SWITCH COAG
34 FOOTSWITCH CUT
35 FOOTSWITCH COAG
36 BIPOLAR FOOTSWITCH
37 N.C.
38 N.C.
39 /Ton
40 /Toff

P310, J310

1 HVDC SOURCE
2 HVDC SOURCE
3 HVDC SNUBBER
4 HVDC RETURN
5 HVDC POS.

P311, J311

1 LINE HIGH
2 LINE LOW
3 LINE TRANSFORMER
4 N.C.
5 LINE SNUBBER
6 N.C.

J312, P1112

1 AC NEUTRAL
2 N.C.

J313, P1113

1 AC HOT
2 N.C
3 N.C.

J314, P1114

1 5V UNREG IN
2 5V UNREG RET
3 12V UNREG IN
4 12V UNREG RET

J315,P1115

1 +12V.
2 VOLUME CONTROL
3 SHIELD GROUND

J320

1 Q5 DRAIN
2 HV CLAMP RESISTOR

J421, P521

1 SHIELD
2 DIGITAL GROUND
3 BIPOLAR UP SWITCH
4 BIPOLAR DOWN SWITCH

J118, P1118 – J419, P1119

1 DIGIT 1
2 DIGIT 2
3 SEGMENT A
4 SEGMENT B
5 SEGMENT C
6 SEGMENT D
7 SEGMENT E
8 SEGMENT F
9 SEGMENT G
10 BIPOLAR UP
11 BIPOLAR DOWN
12 LAMP DRIVE
13 BIPOLAR POWER
14 SPEAKER 1
15 SPEAKER 1
16 SPEAKER 2
17 SPEAKER 2
18 SHIELD
19 DIGITAL GROUND
20 DIGITAL GROUND

J120, P620

1 SHIELD
2 DIGITAL GROUND
3 PURE CUT SWITCH
4 BLEND 1 SWITCH
5 BLEND 2 SWITCH
6 BLEND 3 SWITCH
7 CUT UP SWITCH
8 CUT DOWN SWITCH
9 STANDBY SWITCH
10 BIPOLAR FOOTSWITCH SWITCH
11 READY SWITCH
12 MONOPOLAR FOOTSWITCH SWITCH
13 COAG UP SWITCH
14 COAG DOWN SWITCH

SECTION 12
DISASSEMBLY FOR SERVICE AND COMPONENT REPLACEMENT

This section contains disassembly procedures required to access PCBAs or other components for service.

WARNING

The electrosurgical generator contains hazardous voltages. Place power switch in the OFF (O) position and disconnect power cord assembly from AC grounded receptacle.

CAUTION

The electrosurgical generator contains static–sensitive devices. Open chassis only at a static–free work station. The technician shall wear an ESD wrist strap while working within the chassis. Do not remove PCBAs unless necessary. Handle PCBAs only by the edges.

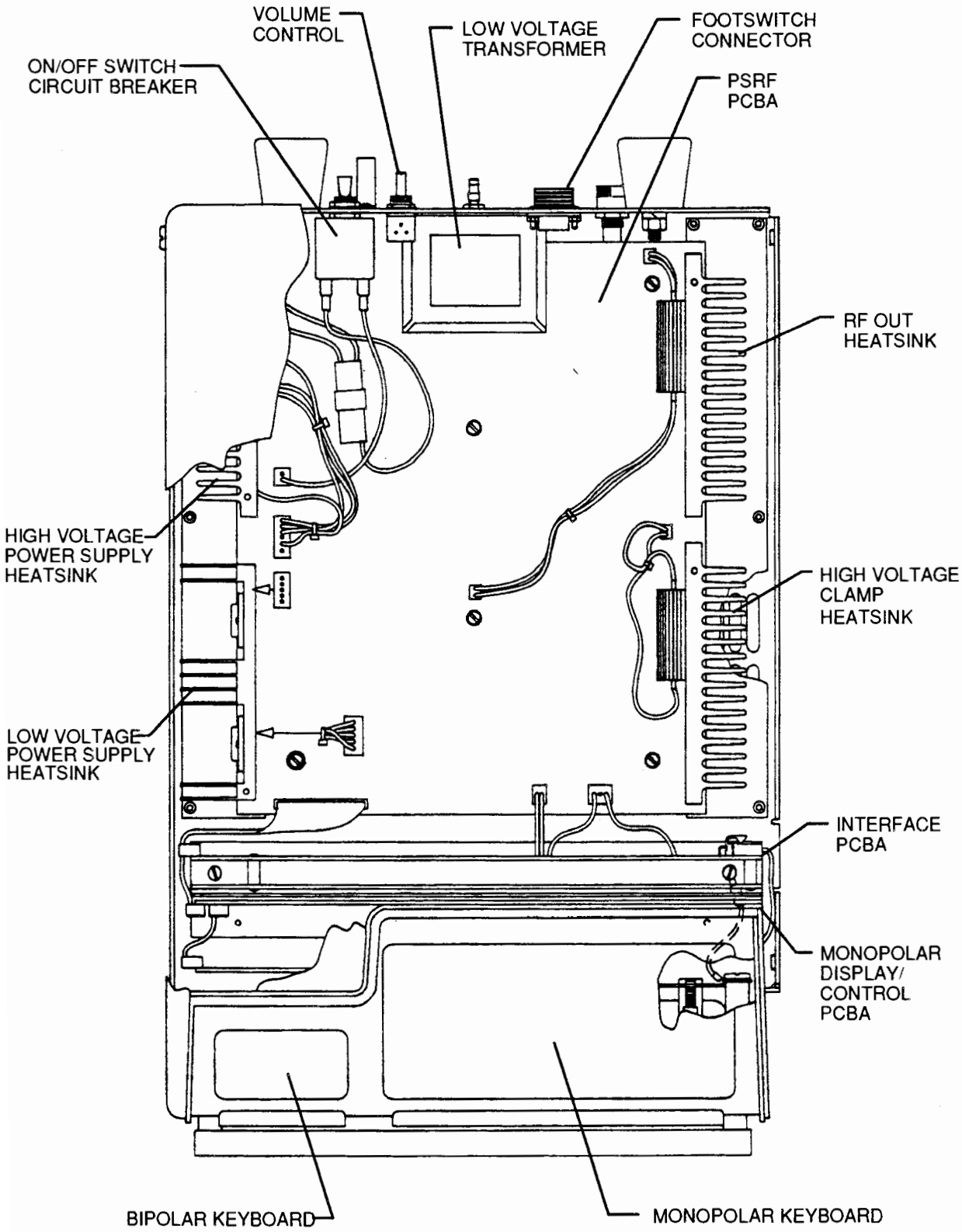

Figure 12.1 Major Component Locations

CONTROL PANEL ASSEMBLY REMOVAL

1. Remove the four screws securing the cover to the generator. Remove the cover.

2. Disconnect the following cables:
   a. P1117 from J117
   b. P800 from J200
   c. P801 from J201
   d. P702 from J202
   e. P1003 from J203

3. Remove the screw, ground wire (green/yellow) and washer from the right handle rod.

4. Remove the screw and washer from left handle rod. Remove the handle.

5. Remove the two screws attaching the Shield Bracket to the Base Assembly.

6. Remove the three hex socket screws from the front of the Control Panel.

7. Lift the Control Panel Assembly from the Base Assembly.

8. Reverse the procedure to reinstall the Front Panel Assembly.

MONOPOLAR DISPLAY/CONTROL PCBA REMOVAL AND REPLACEMENT

1. Remove Front Panel Assembly.

2. Disconnect P118 from J1118 on the Monopolar Display/Control PCBA.

3. Remove three screws and one threaded spacer to remove the Shield Bracket from the Monopolar Display/Control PCBA.

4. Remove the Monopolar Display/Control PCBA.

5. Disconnect the monopolar keyboard cable connector P620 from J120 on the Monopolar Display/Control PCBA.

6. Reverse the procedure to reinstall the Monopolar Display/Control PCBA.

BIPOLAR DISPLAY PCBA REMOVAL AND REPLACEMENT

1. Remove the Front Panel Assembly.

2. Remove the Shield Bracket.

3. Remove three screws to remove the Monopolar Display/Control PCBA

4. Remove the Bipolar Display PCBA.

5. Disconnect the bipolar keyboard cable connector P521 from J421 on the Bipolar Display PCBA.

6. Reverse the procedure to reinstall the Bipolar Display PCBA.

Monopolar and Bipolar Display Lamp Replacement

1. Unsolder lamp leads from the board.

CAUTION: Tubular lamps may break during removal. Use care when removing broken lamps. Remove all debris before installing new lamp.

2. Remove only the lamp from the baffle assembly.

3. Clean mounting holes.4.Insert new lamp in baffle assembly.

NOTE: It may be necessary to slightly enlarge the baffle hole in order to install the new lamp.

5. Solder the lamp leads on the rear of the board.

Monopolar or Bipolar Keyboard Replacement

1. Remove keyboard retainers from the Control Panel.

2. Remove the keyboard.

3. Remove all silicone sealant from the Control Panel.

4. Place a small bead of silicone sealant around the edge of the keyboard sill on the Control Panel.

5. Install the keyboard and secure with keyboard retainers.

6. Carefully remove any excess silicone sealant, when dry, from the front of the keyboard with a razor.

Monopolar or Bipolar Lens Replacement

1. Remove the lens by gently pushing around the edges from the rear of the Control Panel.

2. Remove any residual adhesive with a mild solvent.

3. If a new lens is to be installed, peel off the adhesive backing cover and install the lens in the Control Panel frame.

Monopolar or Bipolar Jackstrip Label Replacement

The monopolar and bipolar jackstrip labels are not reusable. If the Staked Control Panel Assembly is replaced, the labels must be ordered separately.

Monopolar and Bipolar Jackstrip Replacement

1. Remove the nut and lockwasher from each of the terminals on the jackstrip.

2. Remove cable ties as necessary.

3. Remove the jackstrip.

4. Replace the jackstrip by reversing procedure.

INTERFACE PCBA REMOVAL AND REPLACEMENT

1. Disconnect the following cables on the Interface PCBA:

   a. P800 from J200
   b. P801 from J201
   c. P702 from J202
   d. P1003 from J203
   e. P204 from J304
   f. P205 from J305
   g. P1106 from J206
   h. P208 from J1108

2. Remove two screws retaining the Interface Shield from the Base Assembly.

3. Remove the Interface Shield and Interface PCBA from the Base Assembly.

4. Remove six nylon screws securing the Interface PCBA to the Interface Shield.

5. Reassemble and reinstall by reversing Steps 1 through 4.

RF POWER SUPPLY PCBA REMOVAL AND REPLACEMENT

1. Remove the Interface PCBA.

2. Remove two cable clamps from the PCB cover.

3. Remove four screws retaining the PCB cover to the heatsinks.

4. Disconnect the following cable assemblies:

   a. P1106 from J206
   b. P1116 from J316
   c. P204 from J304
   d. P205 from J305
   e. P1112 from J312
   f. P1113 from J313
   g. P1114 from J314
   h. P1115 from J315

5. Remove the six mounting screws and washers and carefully lift the PCBA/heatsinks from the Base Assembly.

NOTE: The mounting screw located in the front left uses a star lockwasher which creates the chassis ground connection. The remaining five washers are insulating.

6. Reinstall the RF Power Supply PCBA by reversing Steps 1 through 4.

Heatsink Assembly Removal and Replacement

1. Disconnect any cable assemblies between the heatsink to be removed and the RF Power Supply PCBA.

2. Place the RF Power Supply PCBA upside down.

3. Remove three screws and washers retaining the heatsink assembly to the PCBA.

4. Gently pull the heatsink assembly from the RF Power Supply PCBA. To prevent component5damage, do not rock the heatsink assembly side to side to remove.

5. If replacing heatsink assembly components, coat the component with thermal compound prior to installation.

6. To reinstall heatsink assembly align component legs with sockets and ensure that all components seat properly.

7. Install three screws and washers through the RF Power Supply PCBA and secure the heatsink assembly.

ELECTRONIC COMPONENT INSTALLATION AND MOUNTING

The following are guidelines and requirements relating to the installation and mounting of components on printed circuit boards.

1. All non–polarized components shall be installed in such a manner that the value, tolerance, and part number are visible.

2. Polarized components shall be installed so that the positive symbol (+), negative symbol (–), or other polarization markings are visible.

3. Components with a coating on the leads may have that coating removed only to the point where that lead enters the component body.

4. The body of the component should be centered between bends (In the use of some miniature diodes it is desirable to leave the cathode lead longer than the anode lead for identification.) The leads, where required, shall be formed to line up with the mounting holes prior to installation.

5. Lead–mounted components shall be positioned so that the major axis of the component is paralleled to any two of the three major planes (sides) of the generator. Any component having a weight in excess of 1/2 oz. shall be mechanically supported by a means other than the leads.

6. All component leads which are, or could be, forced into a shorting condition with either another component lead or a circuit, shall be properly insulated.

7. Component leads shall not be stressed between mounting points. Adequate strain relief shall be provided to prevent damage to the component and solder joints.

8. When installing components on printed circuit boards with circuitry on the component side of the board, components with metallic bodies shall have insulative sleeving.

9. Resistors of 2 watts or less shall be mounted flush to the printed circuit board (.0 – .06).

10. Resistors of 3 watts or more shall be mounted .25 ± .06 from the surface of the printed circuit board.

11. Radial lead capacitors (dip): if bending the lead is required for installation, the bend shall be no closer to the body than .06. Mounting height shall be .032 – .25 from the board surface to the potting material.

12. Surfaces to be soldered shall be clean and free of contaminants that would result in poor soldering.

13. Solder temperature shall be controlled to prevent damage to components or circuitry.

14. Flux residue on the board surface shall be removed.

SECTION 13
ASSEMBLIES AND SCHEMATICS

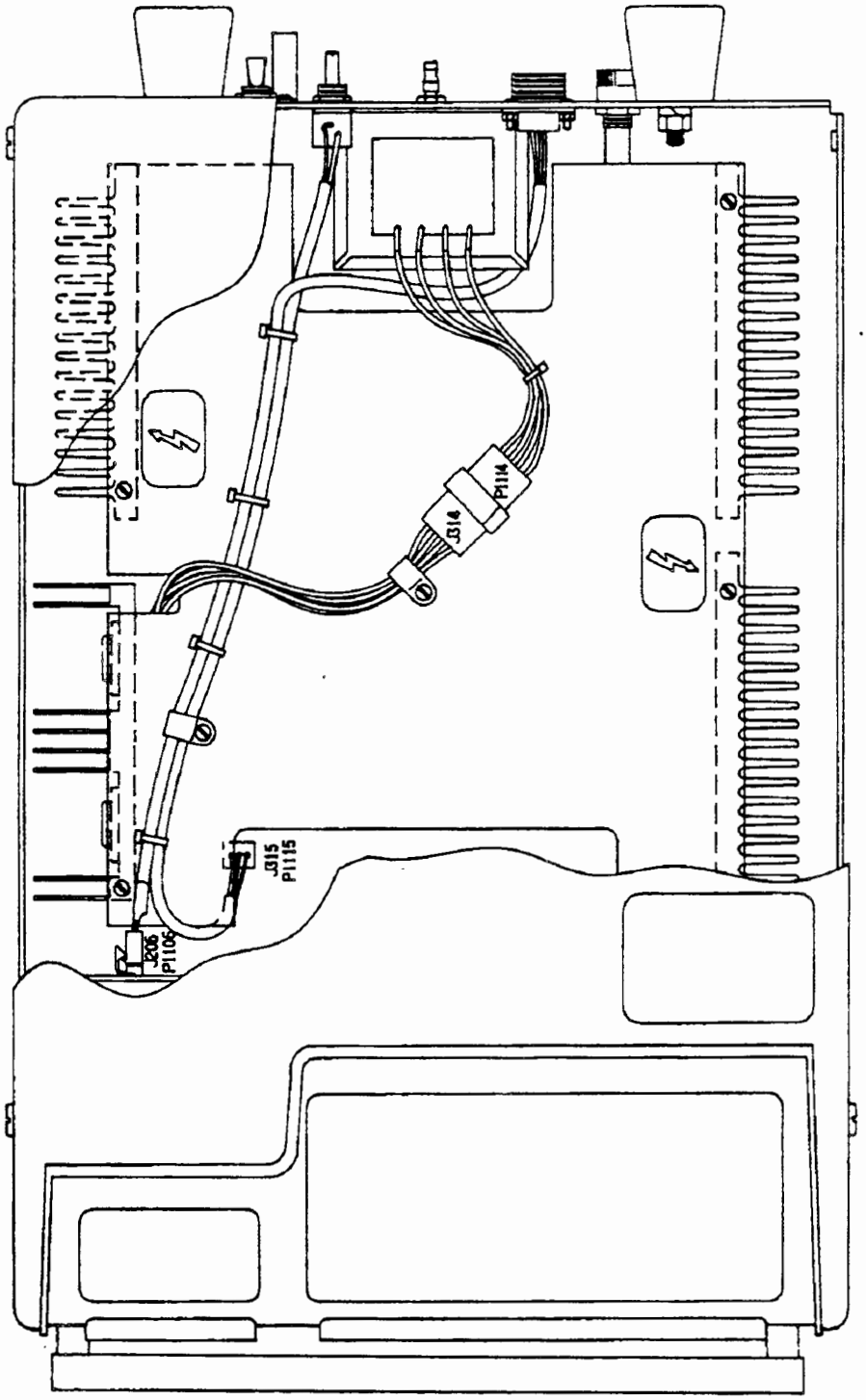

Figure 13.1 Cable/Wiring Diagram

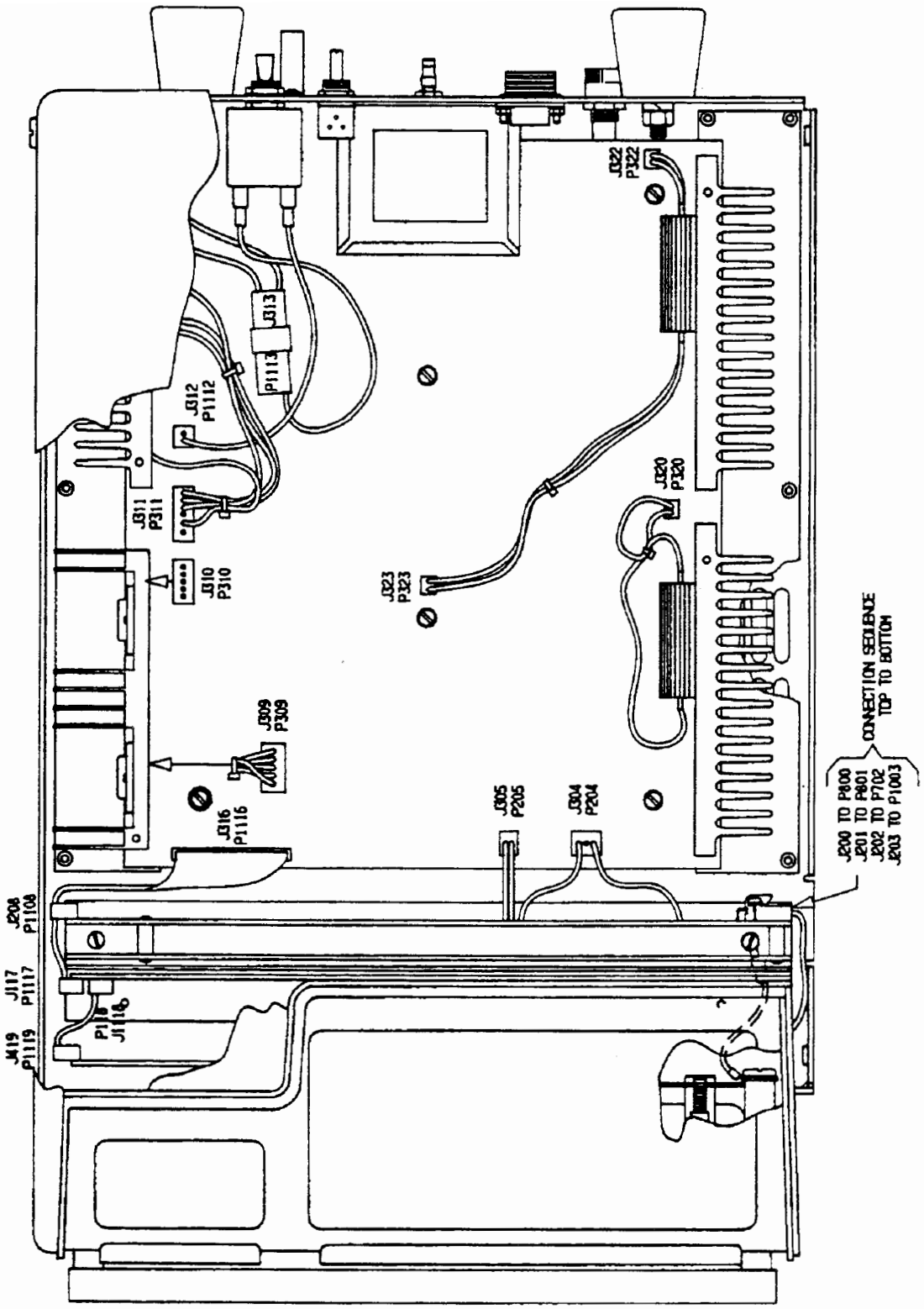

Figure 13.1 (Continued)

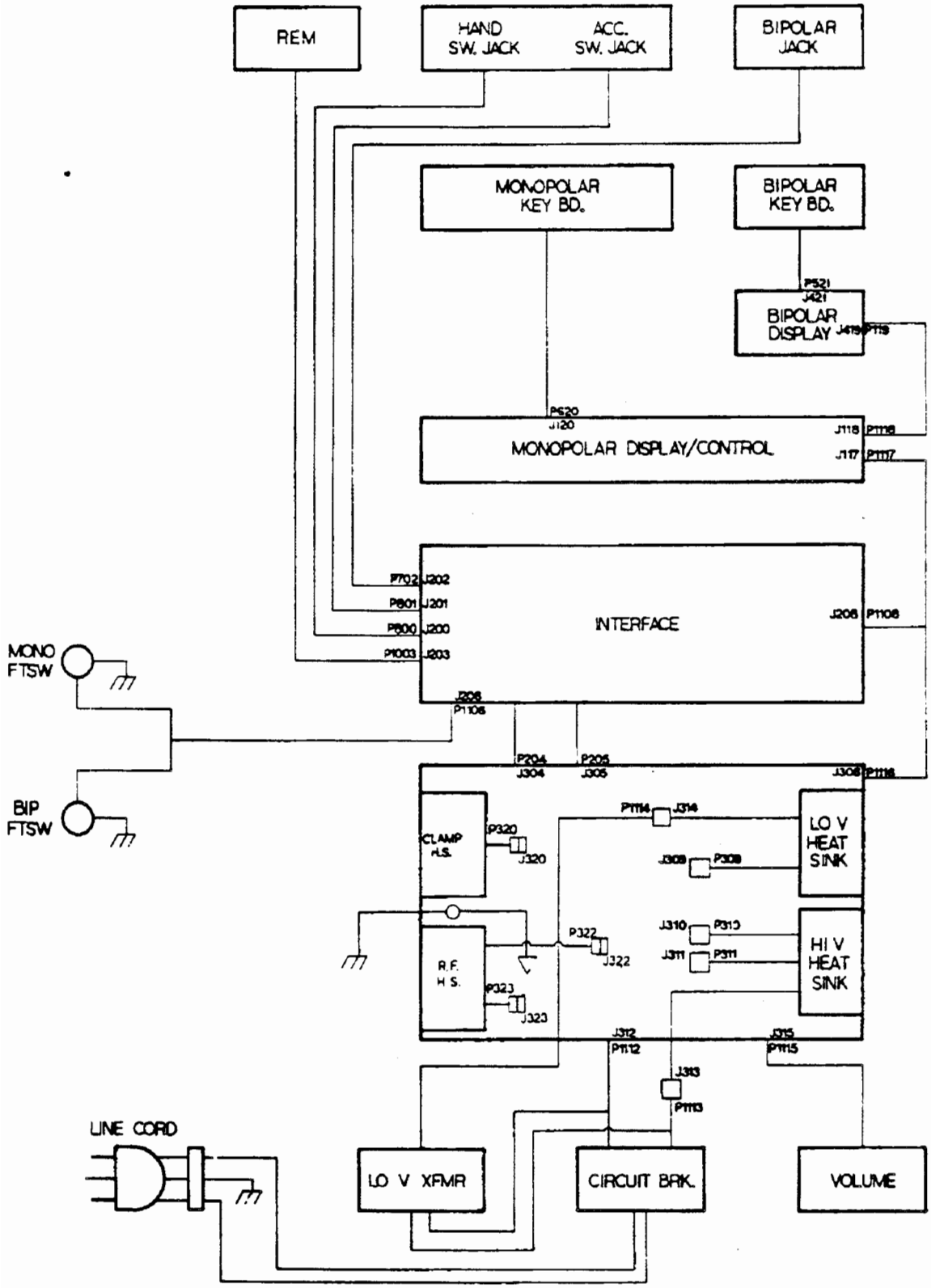

Figure 13.2 System Interconnect Diagram

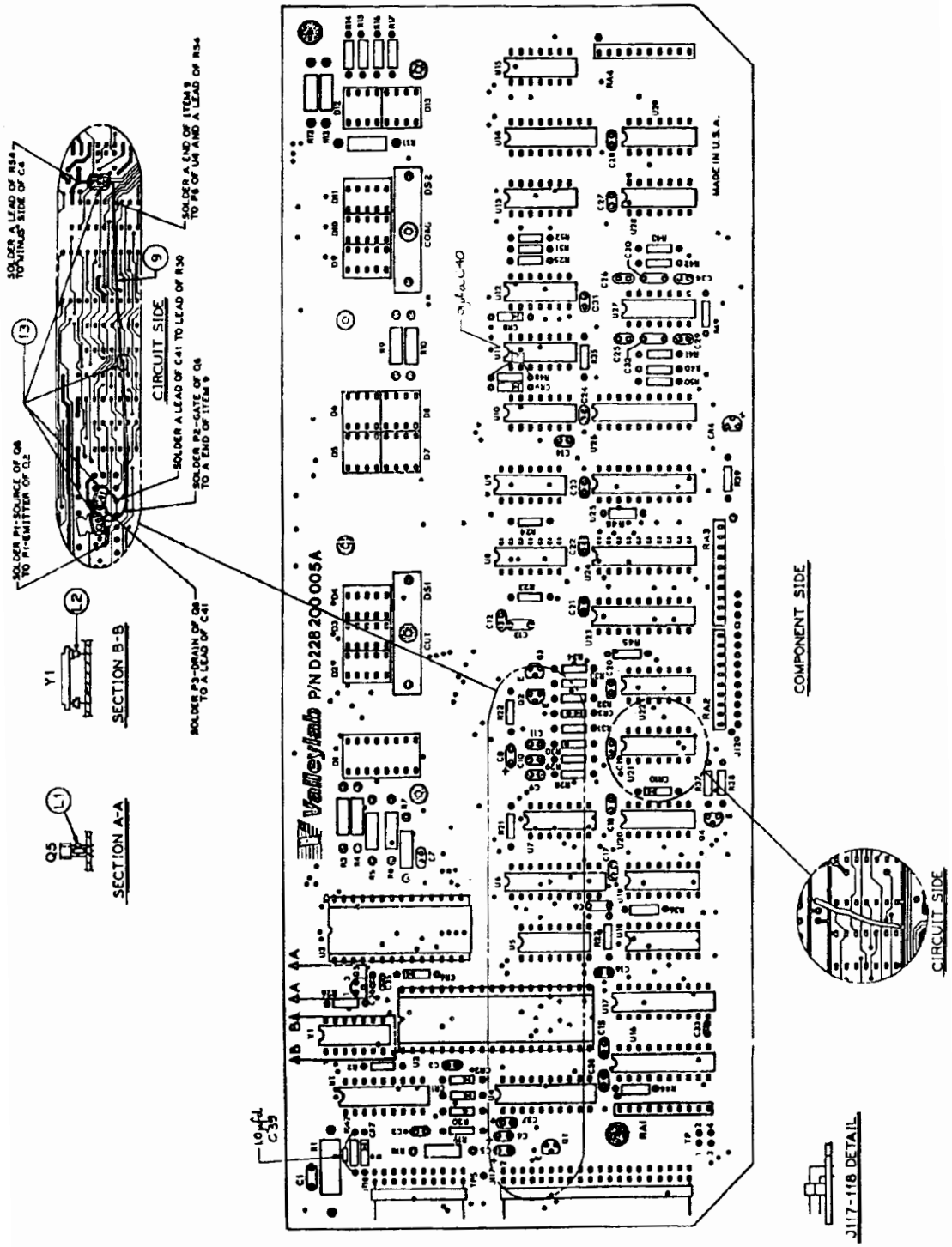

Figure 13.3 Monopolar Display/Control Board

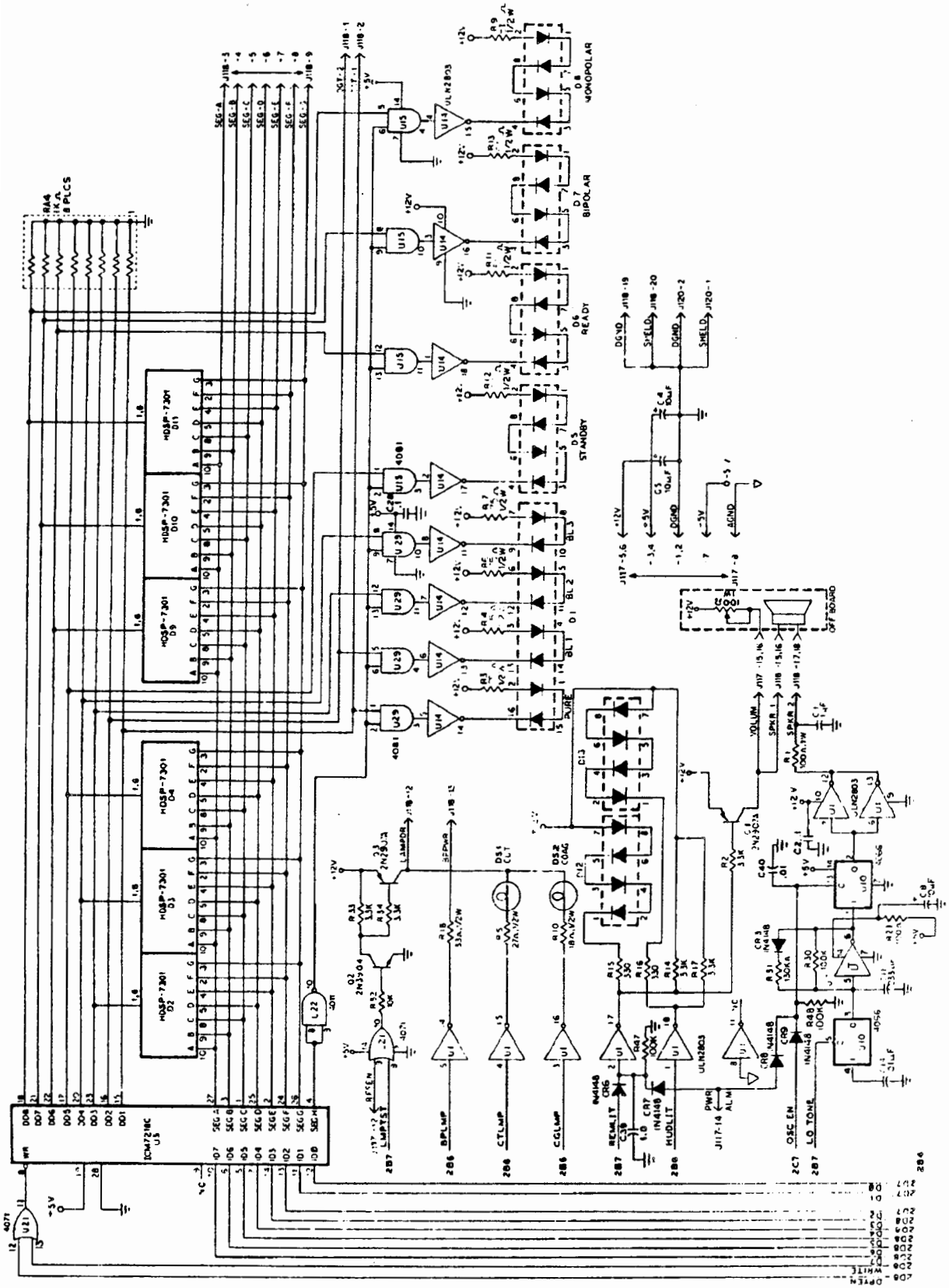

Figure 13.4 Monopolar Display/Control Board Schematic

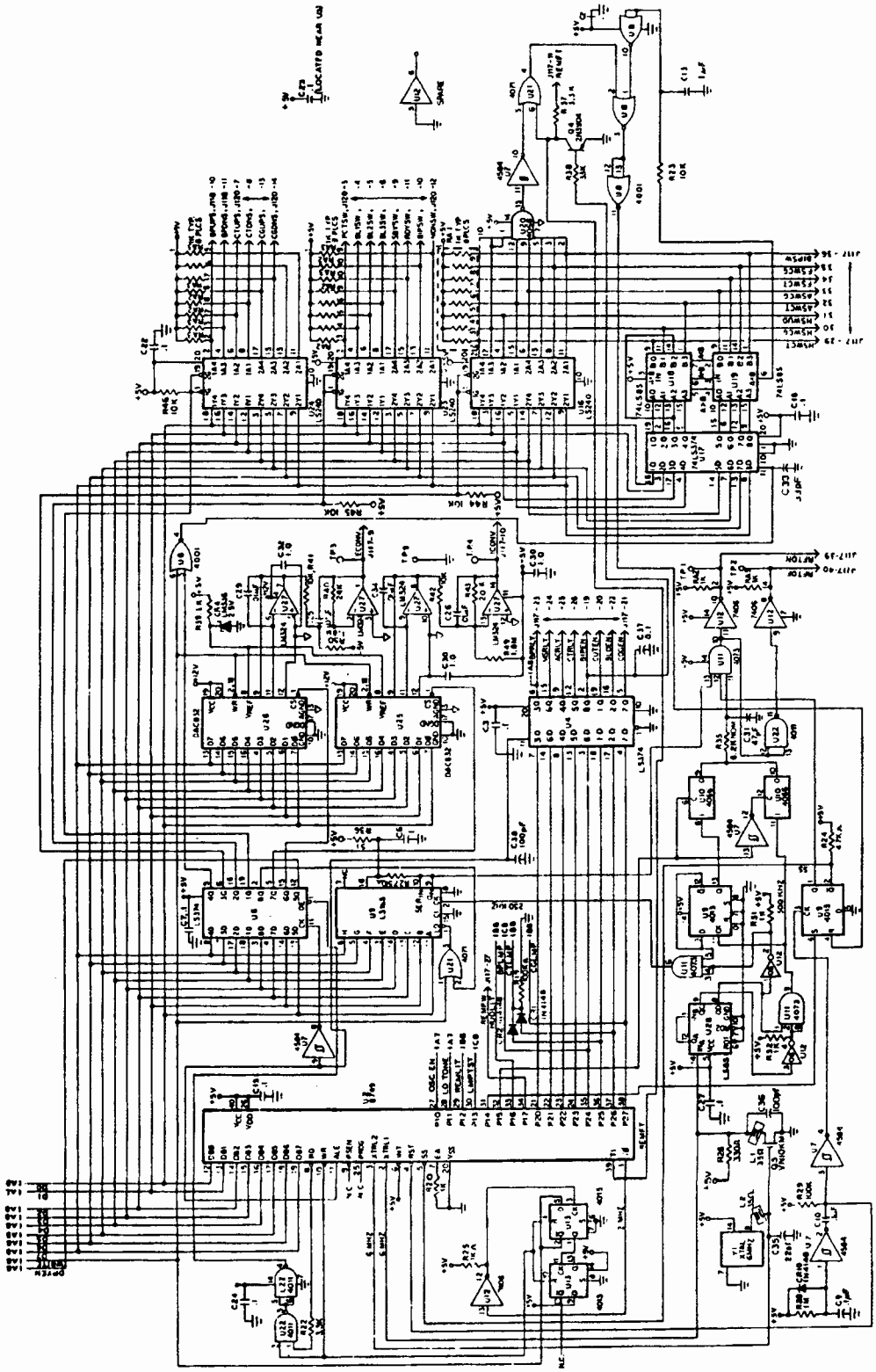

Figure 13.4 (Continued)

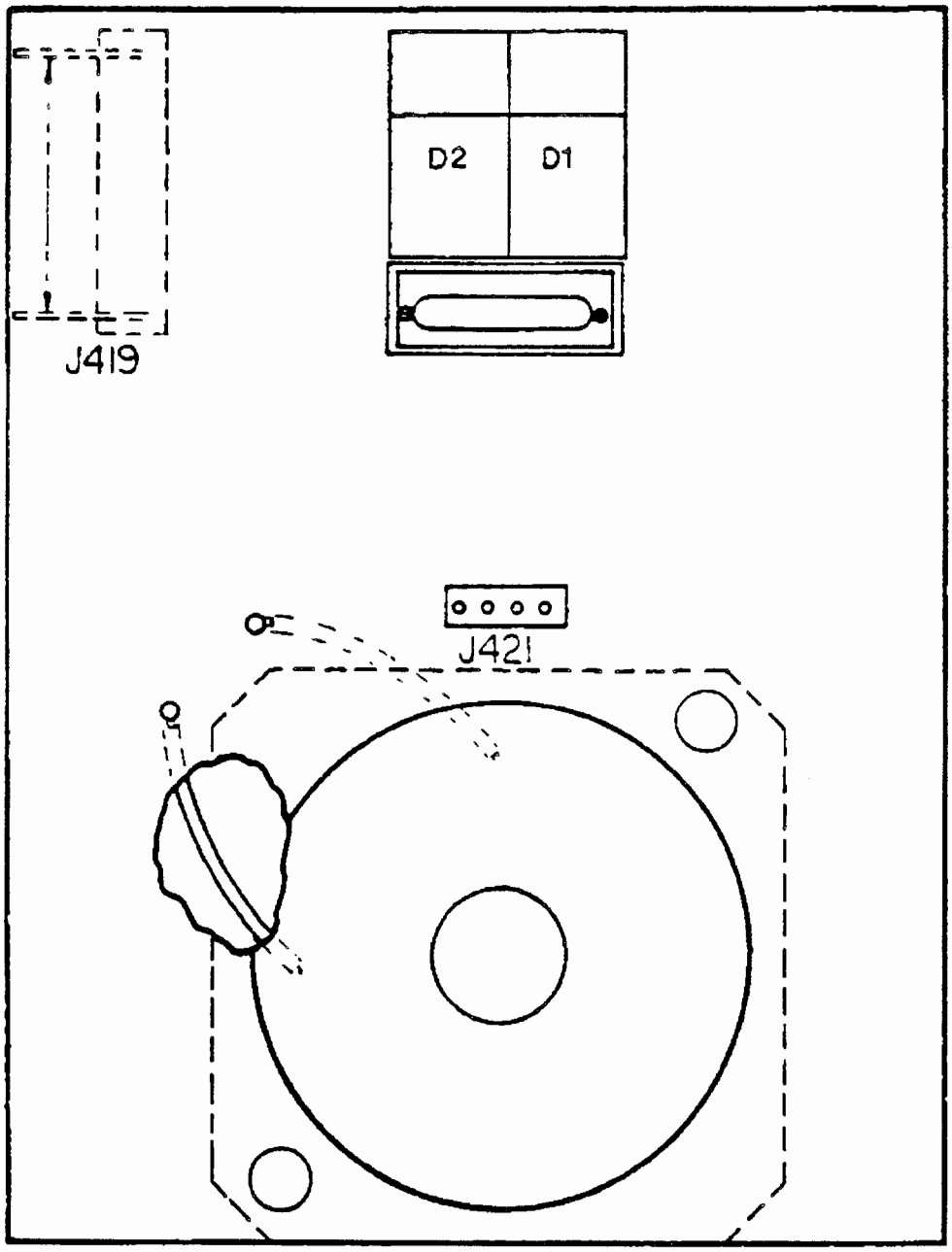

Figure 13.5 Bipolar Display Board

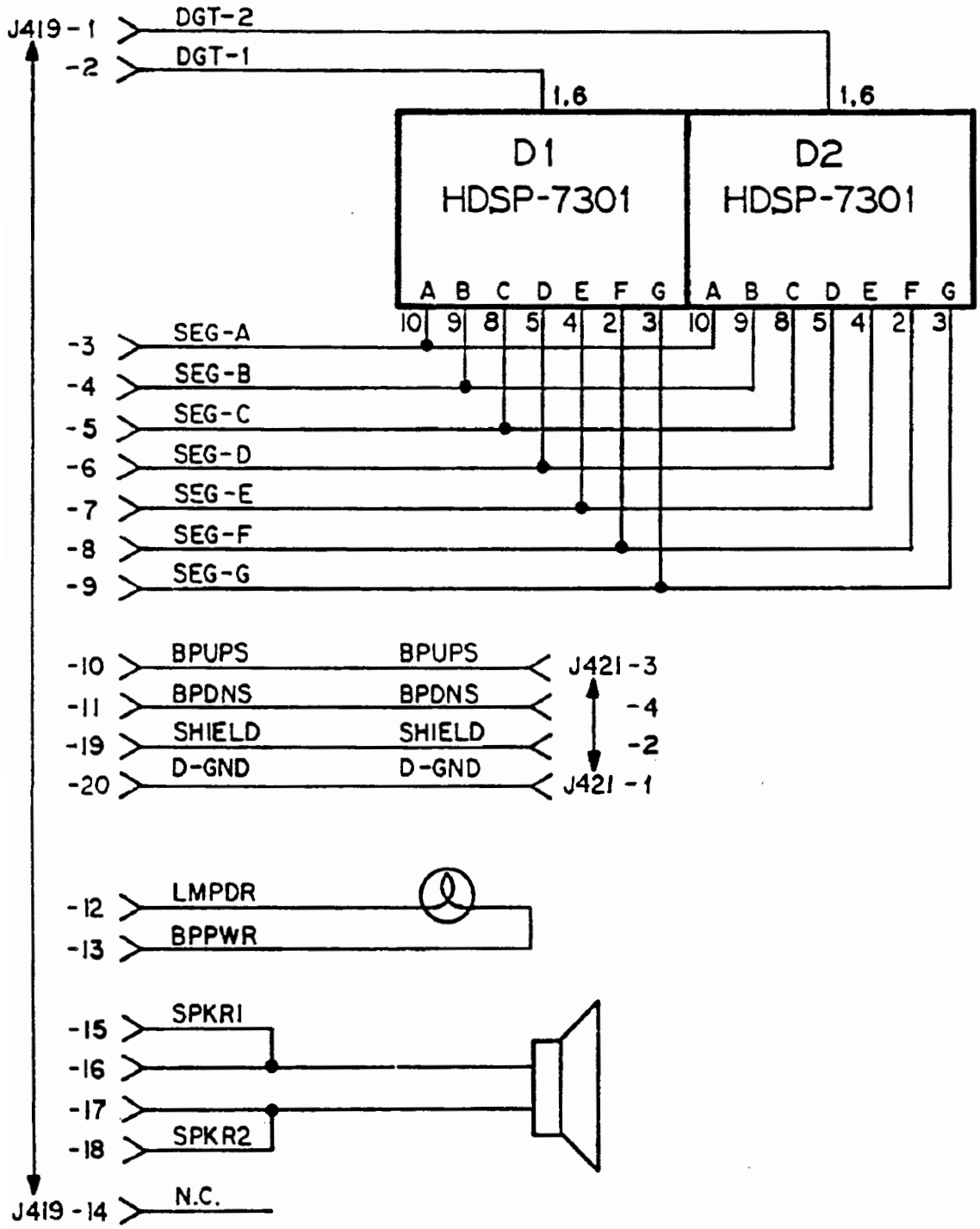

Figure 13.6 Bipolar Display Board Schematic

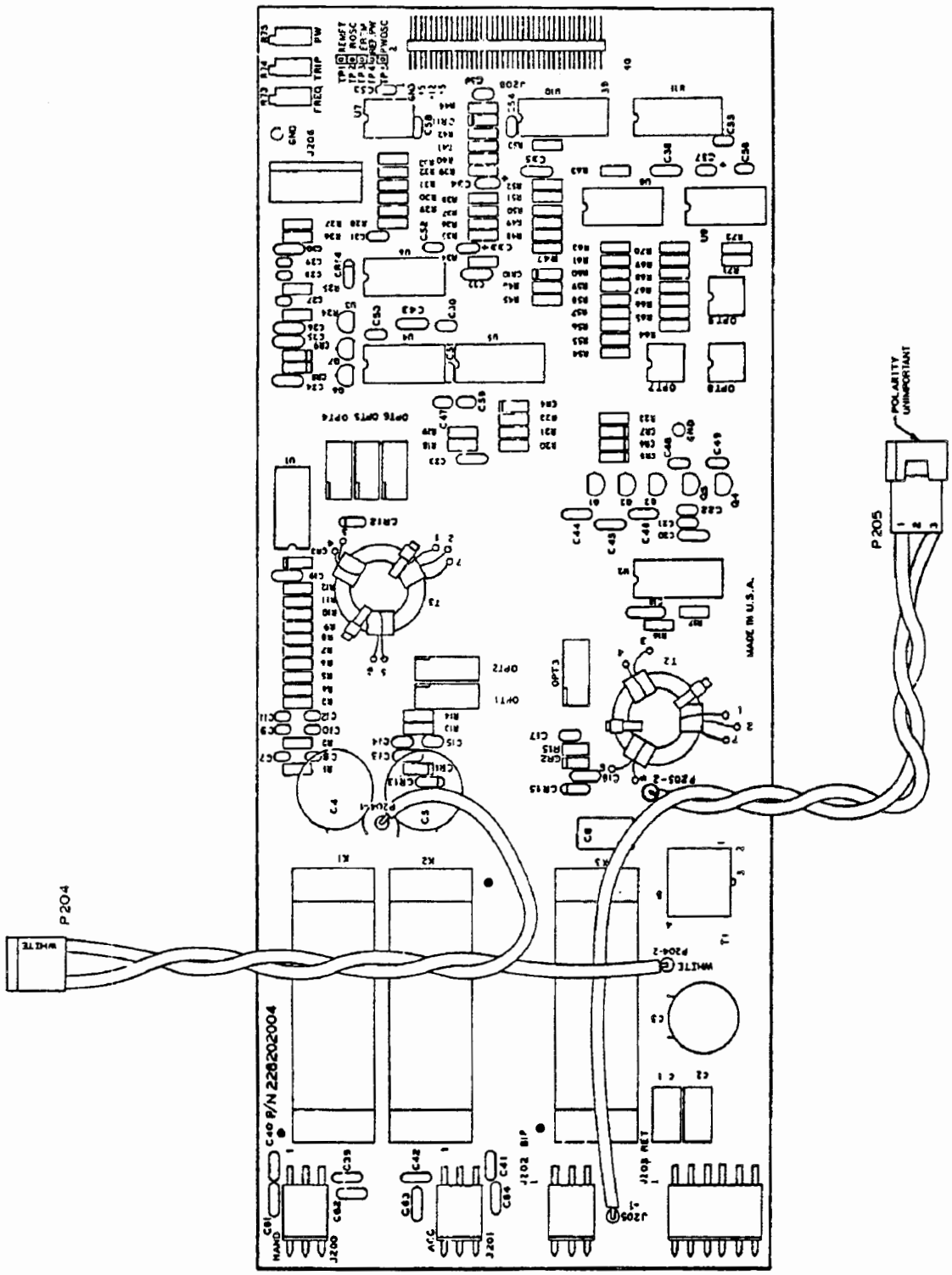

Figure 13.7 Interface Board

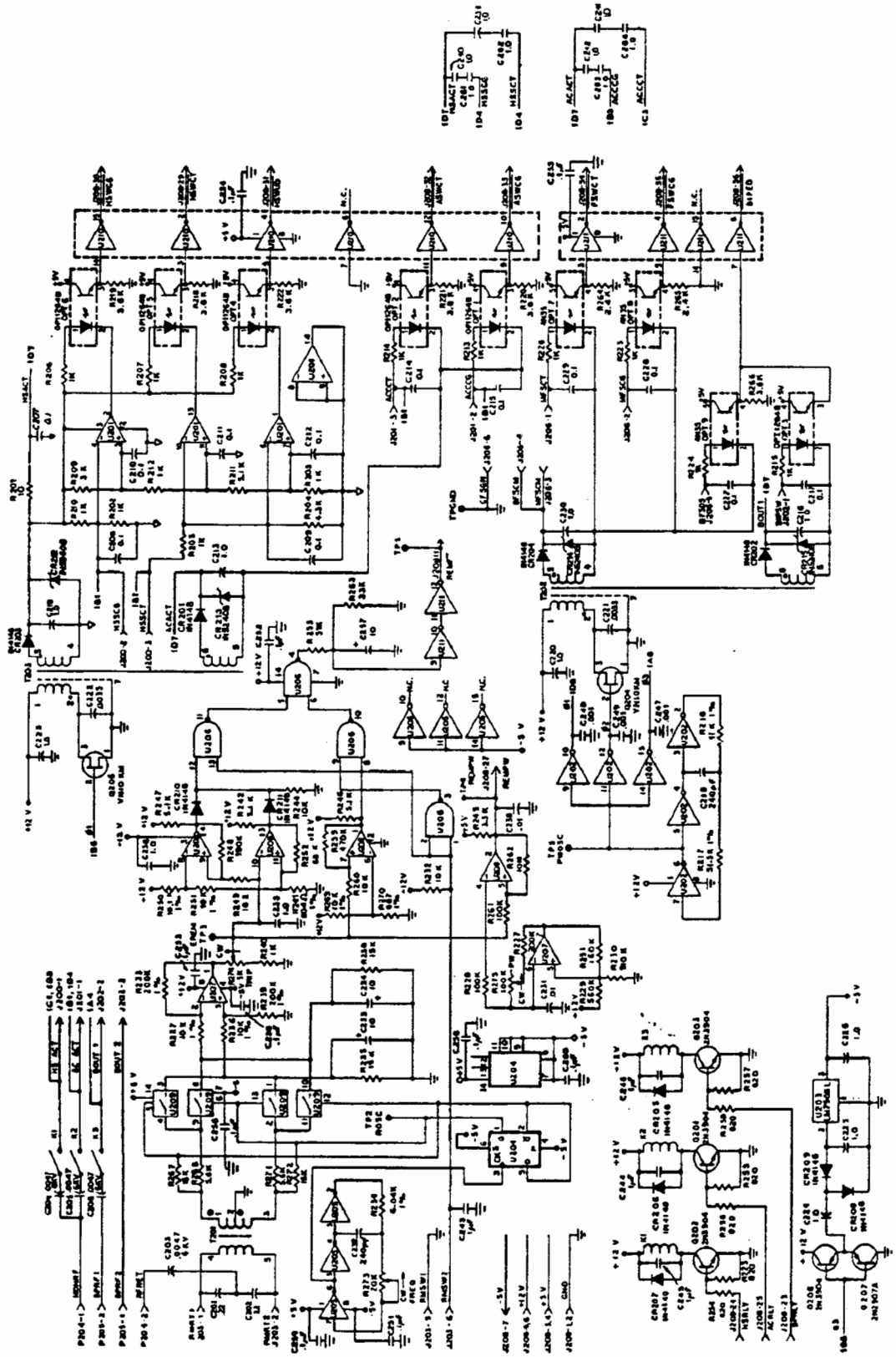

Figure 13.8 Interface Board Schematic

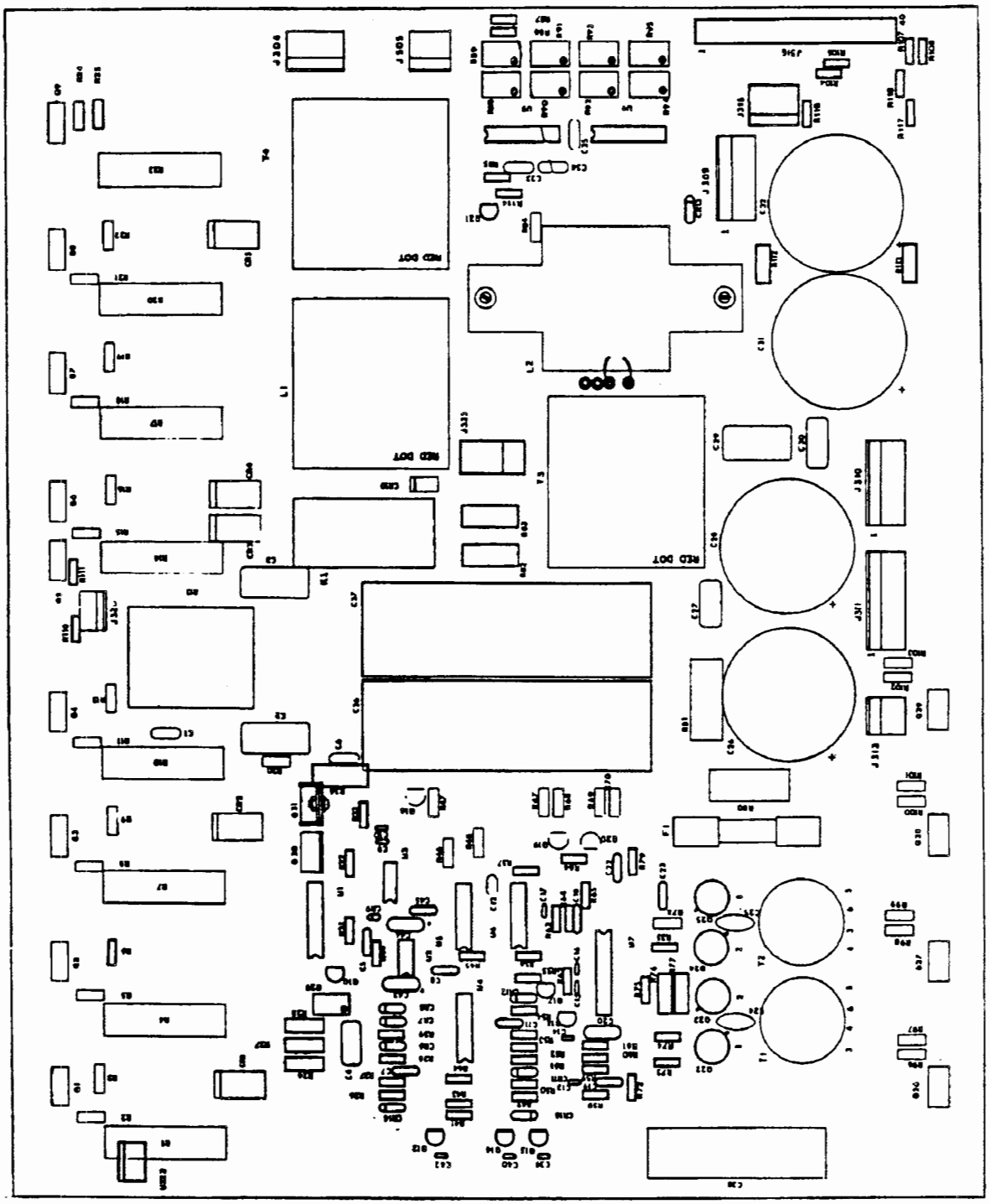

Figure 13.9 Power Supply–RF Output Board

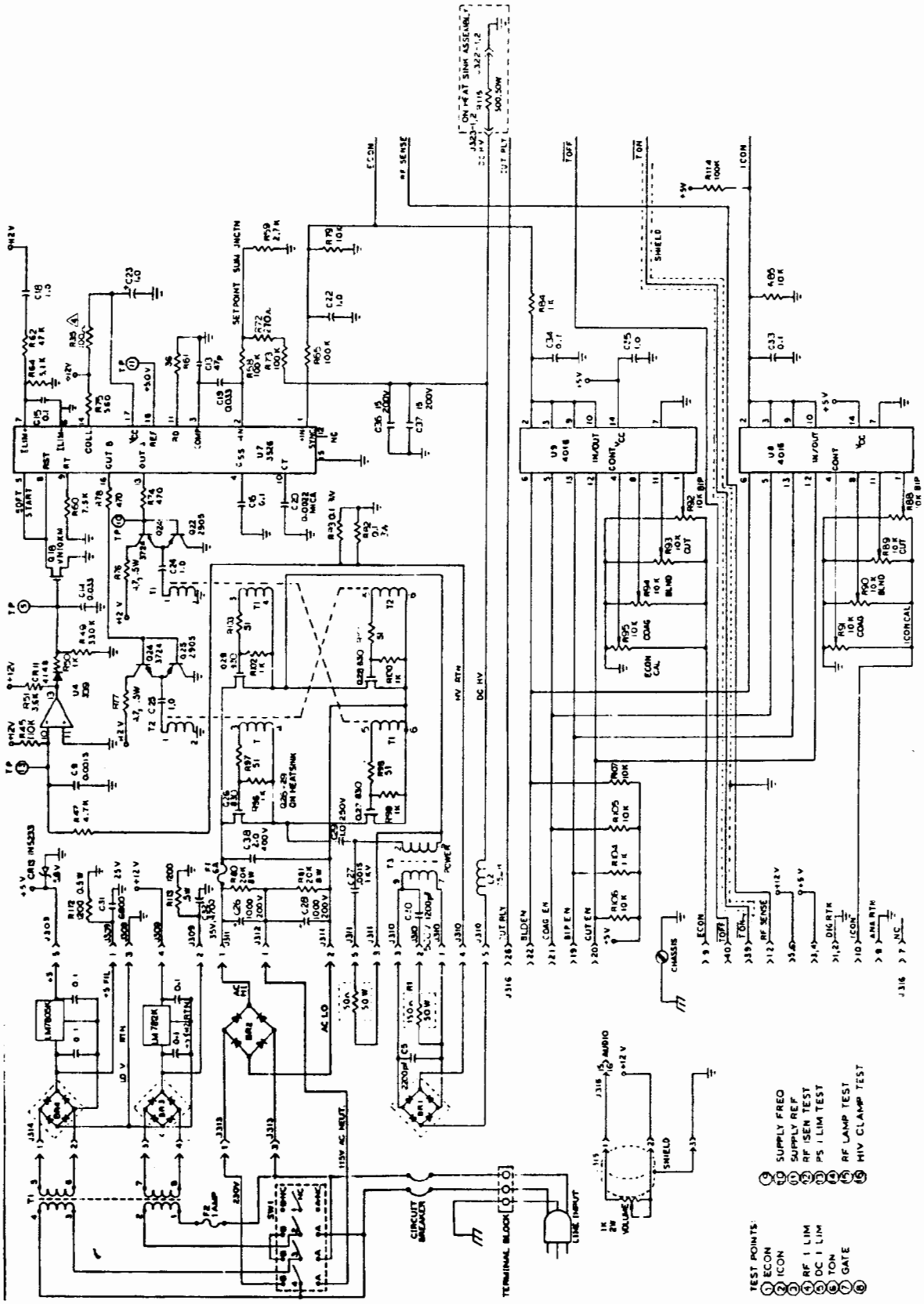

Figure 13.10 Power Supply–RF Output Board Schematic

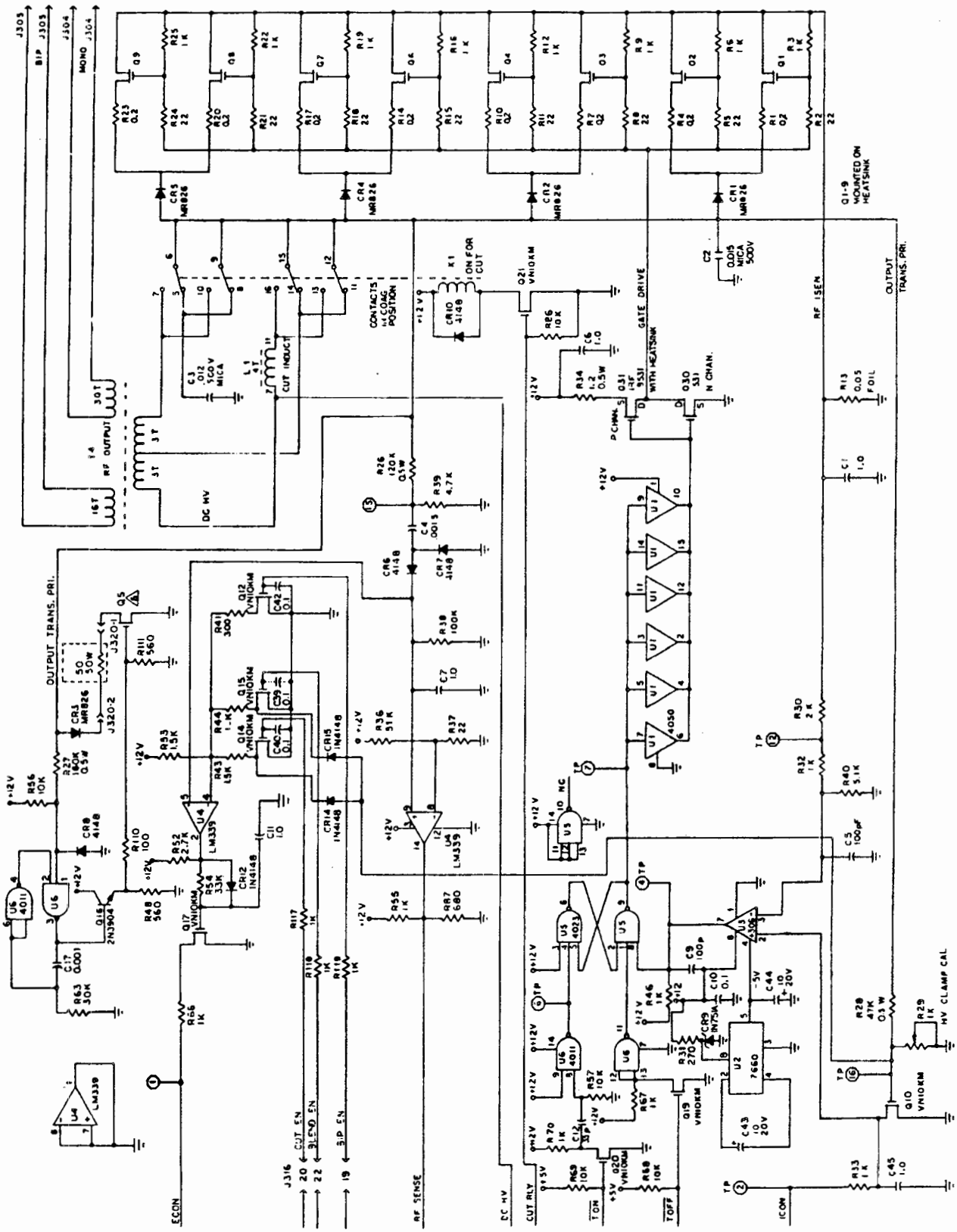

Figure 13.10 (Continued)

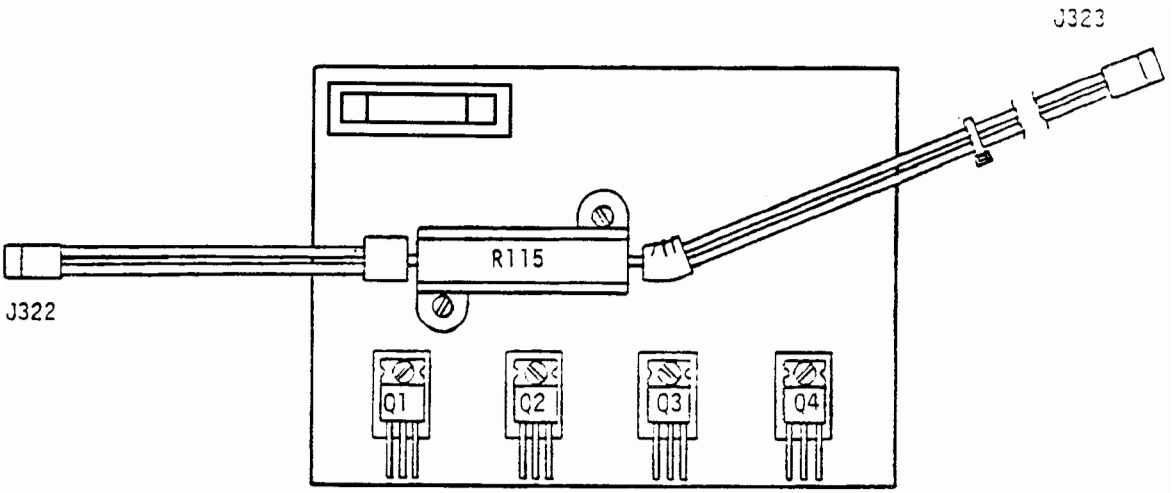

Figure 13.11 Heatsink Assy, RF Out

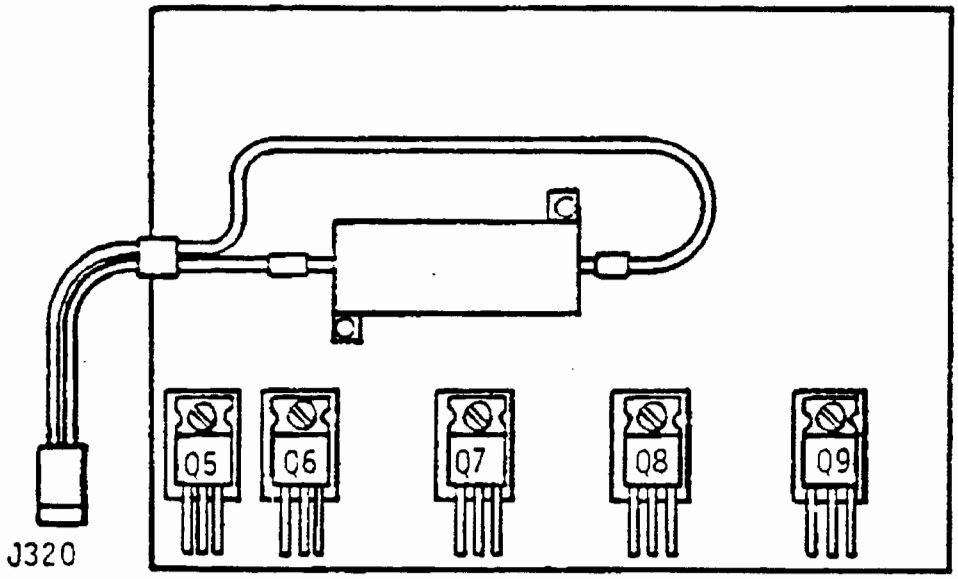

Figure 13.12 Heatsink Assy, Clamp

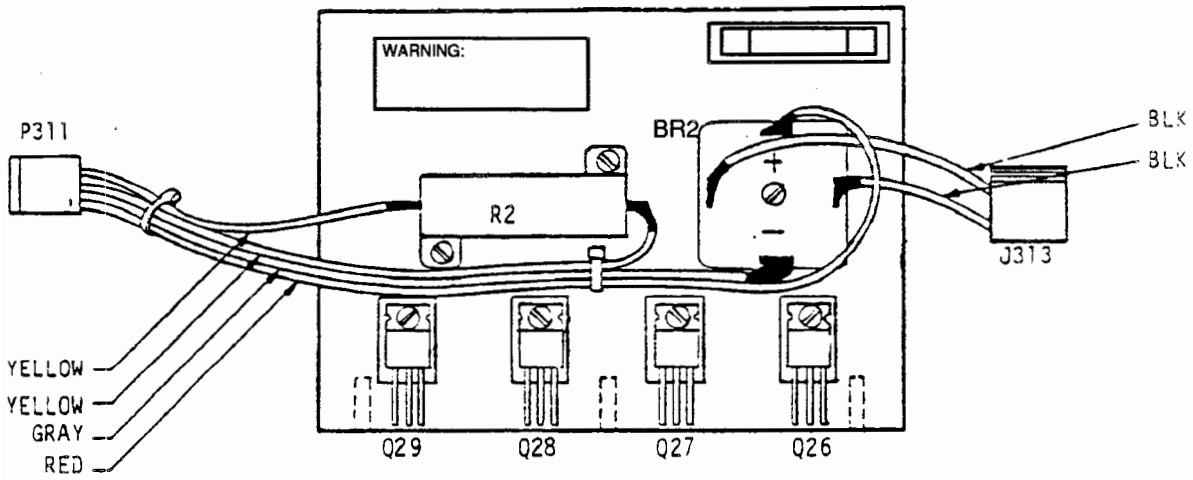

Figure 13.13 Heatsink Assy, Power Supply

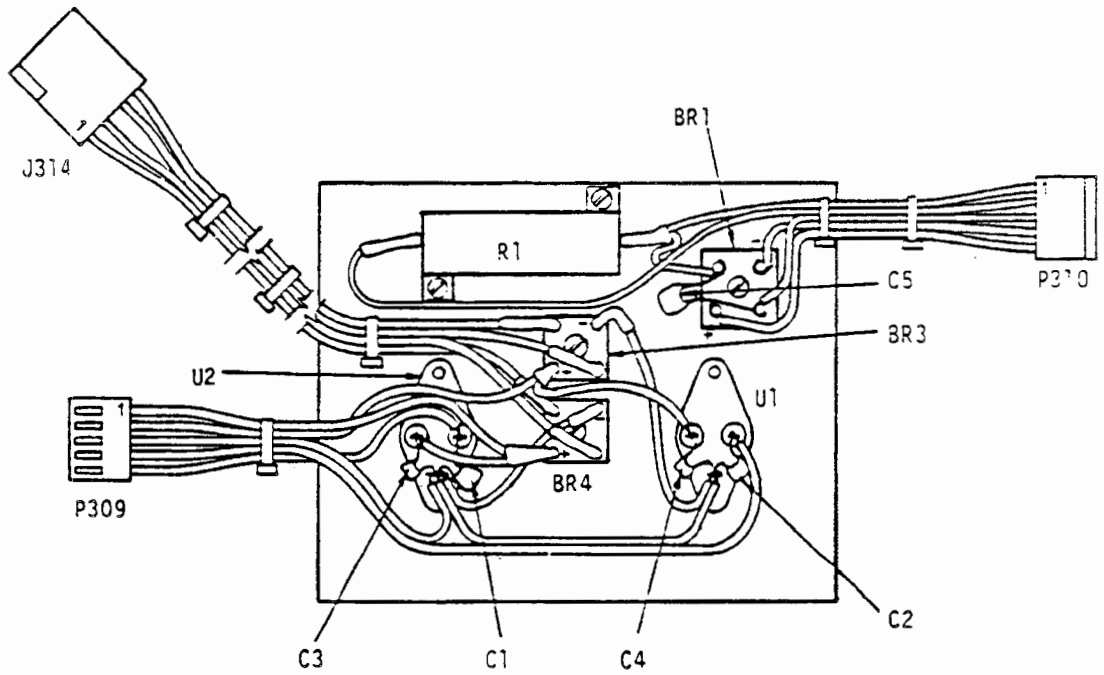

Figure 13.14 Heatsink Assy, LVPS

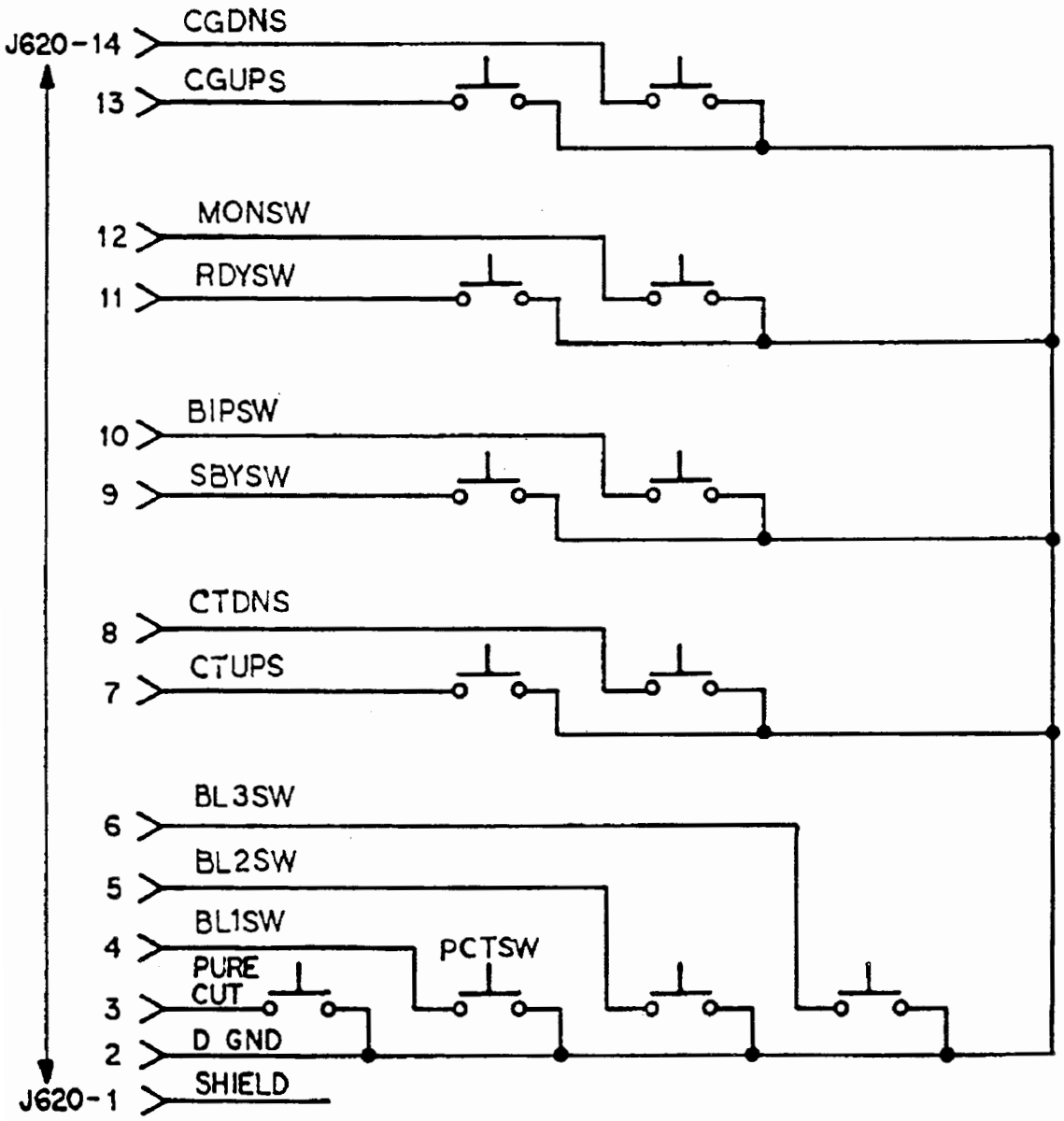

Figure 13.15 Monopolar Keyboard Schematic

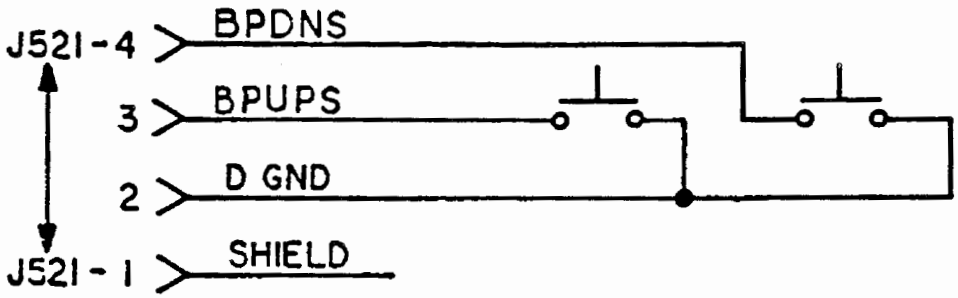

Figure 13.16 Bipolar Keyboard Schematic

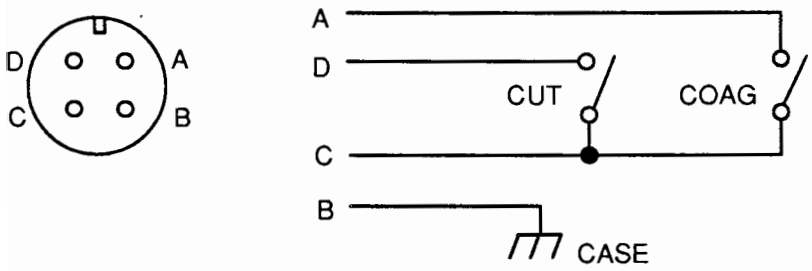

Figure 13.17 Monopolar Footswitch Connector Schematic

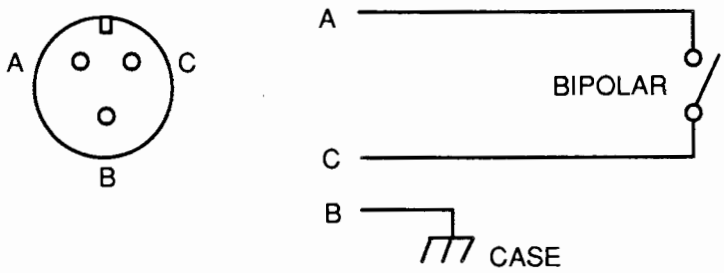

Figure 13.18 Bipolar Footswitch Connector Schematic

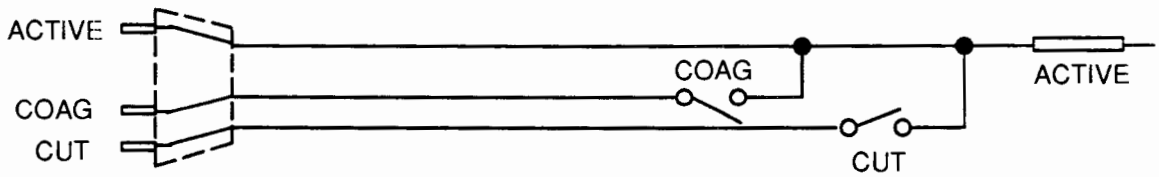

Figure 13.19 Monopolar Handswitch Schematic

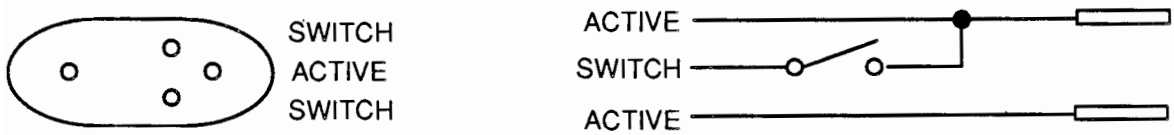

Figure 13.20 Bipolar Handswitch Schematic

SECTION 14
PARTS LIST

PCB ASSEMBLY, MONOPOLAR DISPLAY — 201 200 200 A

REFERENCE DESIGNATION	DESCRIPTION	VALLEYLAB PART NUMBER
RESISTORS		
R1	100 ohm ± 5%, 1W	234 022 039
R2, 14, 17, 22, 33, 34, 37	3.3k ohm ± 5%, 1/4W	234 024 075
R3, 4, 6, 7	75 ohm ± 5%, 1/2W	234 014 086
R5	27 ohm ± 5%, 1/2W	234 014 077
R9, 11, 12, 13	51 ohm ± 5%, 1/2W	234 014 083
R10	18 ohm ± 5%, 1/2W	234 014 073
R15,16, 26	330 ohm ± 5%, 1/4W	234 024 051
R18	33 ohm ± 5%, 1/2W	234 014 078
R19, 29, 30, 47, 48	100k ohm ± 5%, 1/4W	234 024 111
R20, 25, 39, 51, 52	1k ohm ± 5%, 1/4W	234 024 063
R21	100 ohm ± 5%, 1/4W	234 024 039
R23, 32, 41, 42, 44–46	10k ohm ± 5%, 1/4W	234 024 087
R24	4.7k ohm ± 5%/ 1/4W	234 024 079
R27	510 ohm ± 5%, 1/4W	234 024 056
R28	1 Meg ohm ± 5%, 1/4W	234 024 135
R31	130k ohm ± 5%, 1/4W	234 024 114
R35, 36	51 ohm ± 5%, 1/4W	234 024 032
R38	33k ohm ± 5%, 1/4W	234 024 099
R40	24k ohm ± 5%, 1/4W	234 024 096
R43	20k ohm ± 5%, 1/4W	234 024 094
R49, 50	1.8 Meg ohm ± 5%, 1/2W	234 024 141
RA1–4	RESISTOR ARRAY, 1k ohm	234 100 134
CAPACITORS		
C1, 6, 13, 30, 32	1.0 µf ± 20%, 50V	204 118 014
C2, 3, 7, 9, 10, 12, 15–24, 27, 28, 37	0.1 µf ± 20%, 50V	204 118 007
C4, 5, 8	10 µf ± 20%, 25V	204 102 028
C11	.033 µf ± 20%, 50V	204 118 004
C14, 25, 26, 29, 34	.01 mf ± 20%, 50V	204 118 001
C31	47 pf ± 15%, 100V	204 200 009
C33	33 pf ± 15%, 100V	204 200 007
C35	22 pf ± 15%, 100V	204 200 005
C36, 38	100 pf ± 15%, 100V	204 200 013

INTEGRATED CIRCUITS

U1, 14	2803A	210 800 002
U2	8749, Programmed	210 730 066
U3	ICM7218C	210 700 001
U4, 6, 17	74LS374	210 520 374
U5	74LS165	210 520 165
U7	MC14584B	210 212 106
U8	4001B	210 210 001
U9, 13	4013B	210 027 001
U10	4066	210 200 022
U11	4073B	210 210 073
U12	SN7406	210 500 005
U15, 29	4081	210 210 081
U16, 23, 24	74LS240	210 520 240
U18, 19	74LS85	210 520 085
U20	4068B	210 210 068
U21	4071B	210 210 071
U22	4011B	210 210 011
U25, 26	DAC0832	210 075 001
U27	LM324N	210 022 000
U28	74LS92	210 520 092
CR4	M336	210 300 016

TRANSISTORS

Q1, 3	2N2907A	239 100 012
Q2, 4	2N3904	239 015 000
Q5	VN10KM	239 200 012

DIODES

CR1, 2, 3, 6–10	1N4148	239 014 000

LED'S

D1	HLMP2720	239 750 022
D2, 3, 4, 9, 10, 11	HDSP7031	239 750 029
D5, 7, 8	HLMP2755	239 750 033
D6, 13	HLMP2855	239 750 039
D12	HLMP2655	239 750 042

MISCELLANEOUS

Y1	CRYSTAL, 6 MHz	250 010 005
L1, 2	EMI FERRITE BEAD	251 100 090
	LAMP, PTL 20D/12	215 200 070

PCB ASSEMBLY, BIPOLAR DISPLAY — 201 201 003 C

REFERENCE DESIGNATION	DESCRIPTION	VALLEYLAB PART NUMBER
D1, 2	HDSP7301	239 750 029
	SPEAKER, 8 ohm	241 003 001
	LAMP, PTL 6/12	215 200 071

PCB ASSEMBLY, INTERFACE — 201 202 006 A

REFERENCE DESIGNATION	DESCRIPTION	VALLEYLAB PART NUMBER
RESISTORS		
R201	10 ohm ± 5%, 1/4W	234 024 015
R202, 203, 205–208, 210, 212–215, 224–226, 240	1k ohm ± 5%, 1/4W	234 024 063
R204	4.3k ohm ± 5%, 1/4W	234 024 078
R209	3k ohm ± 5%, 1/4W	234 024 074
R211, 242, 246, 247	5.1k ohm ± 5%, 1/4W	234 024 080
R216	11k ohm ± 1%, 1/8W	234 201 389
R217	51.1k ± 1%, 1/8W	234 201 453
R218–222, 266	3.6k ohm ± 5%, 1/4W	234 024 076
R223, 254–258	820 ohm ± 5%, 1/4W	234 024 061
R227	200k ohm ± 5%, 1/4W	234 024 118
R228, 261	100k ohm ± 5%, 1/4W	234 024 111
R229	560k ohm ± 5%, 1/4W	234 024 129
R230	910k ohm ± 5%, 1/4W	234 024 134
R231	160k ohm ± 5%, 1/4W	234 024 116
R232, 244, 249, 260	10k ohm ± 5%, 1/4W	234 024 087
R233, 239	200k ohm ± 1%, 1/8W	234 024 510
R234	6.04k ohm ± 1%, 1/8W	234 201 364
R235, 238, 267, 272	15k ohm ± 5%, 1/4W	234 024 091
R236, 237, 251, 269	10k ohm ± 1%, 1/8W	234 201 385
R241	604 ohm ± 1%, 1/8W	234 201 268
R245	3.3k ohm ± 5%, 1/4W	234 024 075
R248	390k ohm ± 5%, 1/4W	234 024 125
R250	19.1k ohm ± 1%, 1/8W	234 201 412
R252	68k ohm ± 5%, 1/4W	234 024 107
R253	51k ohm ± 5%/ 1/4W	234 024 104
R259	470k ohm ± 5%, 1/4W	234 024 127
R262	10 Meg ohm ± 5%, 1/4W	234 024 158
R263	33k ohm ± 5%, 1/4W	234 024 099
R264, 265	2.4k ohm ± 5%, 1/4W	234 024 072
R268, 271	5.6k ohm ± 5%, 1/4W	234 024 081
R270	887 ohm ± 1%, 1/8W	234 201 284
R273	TRIMPOT, 20k ohm	236 010 008
R274	TRIMPOT, 5k ohm, #3299X	236 010 006
R275	TRIMPOT, 100k ohm, #3299X	236 010 011

CAPACITORS

C201, 202	.22 µf ± 10%, 250V	204 400 120
C203–206	.0047 µf ± 20%, 6kV	204 025 050
C207–212, 214, 215, 217, 227–229, 250–256, 258–260	0.1 µf ± 20%, 50V	204 118 007
C213, 216, 219, 220, 223–226, 230, 235, 236, 239–246, 261–264	1.0 µf ± 20%, 50V	204 118 014
C218, 232	240 pf ± 5%, 500V	204 105 011
C221, 222	3300 pf	204 200 031
C231, 238	.010 µf ± 15%, 100V	204 200 037
C233, 234, 237	10 µf ± 20%, 25V	204 102 028
C247–249	.001 µf ± 20%, 50V	204 121 060

INTEGRATED CIRCUITS

U201, 208	LM339AN	210 300 015
U202, 205, 210, 211	4049B	210 210 049
U203	I79L05AC	210 300 071
U204	4013B	210 027 001
U206	4011B	210 210 011
U207	LM358AN	210 300 013
U209	4066	210 200 022

TRANSISTORS

Q201–203, 206	2N3904	239 015 000
Q204–205	VN10KM	239 200 012
Q207	2N2907A	239 100 012

DIODES

CR201–211	1N4148	239 014 000
CR212–215	1N5240B	239 600 001

TRANSFORMERS

T201	TRANSFORMER ASSY	202 900 017
T202, 203	TOROID ASSY	202 224 000

MISCELLANEOUS

K1–3	REED RELAY, 8 kV	230 006 019
OPT201–206	OPTO–ISOLATOR 1264B	239 750 019
OPT207–209	OPTO–ISOLATOR 4N35	239 750 002

PCB ASSEMBLY, POWER SUPPLY — 201 203 005 A

REFERENCE DESIGNATION	DESCRIPTION	VALLEYLAB PART NUMBER
RESISTORS		
R1, 4, 7, 10, 14, 17, 20, 23	RESISTOR ASSY, .2 ohm	203 077 001
R2, 5, 8, 11, 15, 18, 21, 24, 37	22 ohm ± 5%, 1/4W	234 024 023
R3, 6, 9, 12, 16, 19, 22, 25, 32, 33, 44, 46, 50, 55, 66, 67, 70, 84, 96, 99, 100, 102, 104, 117–119	1k ohm ± 5%, 1/4W	234 024 063
R13	FOIL INCONEL, .04 ohm	222 640 001
R26	120k ohm ± 5%, 1/2W	234 014 124
R27	160k ohm ± 5%, 1/2W	234 014 127
R28	47k ohm ± 5%, 1/2W	234 014 115
R29	TRIMPOT, 1k ohm	236 200 076
R30	2k ohm ± 5%, 1/4W	234 024 070
R31, 72	270 ohm ± 5%, 1/4W	234 024 049
R34	1.2k ohm ± 5%, 1/2W	234 014 048
R35, 110	100 ohm ± 5%, 1/4W	234 024 039
R36	51k ohm ± 5%, 1/4W	234 024 104
R37, 39	4.7k ohm ± 5%, 1/4W	234 024 079
R38, 58, 65, 73, 114	100k ohm ± 5%, 1/4W	234 024 111
R40, 64	5.1k ohm ± 5, 1/4W	234 024 080
R41	300 ohm ± 5%, 1/4W	234 024 050
R43, 53	1.5k ohm ± 5%, 1/4W	234 024 067
R45	110k ohm ± 5%, 1/4W	234 024 112
R48, 75, 111	560 ohm ± 5%, 1/4W	234 024 057
R49	330k ohm ± 5%, 1/4W	234 024 123
R51	3.6k ohm ± 5%, 1/4W	234 024 076
R52, 59	2.7k ohm ± 5%, 1/4W	234 024 073
R53	1.5k ohm ± 5%, 1/4W	234 024 067
R54	33k ohm ± 5%, 1/4W	234 024 099
R56, 57, 68, 69, 79, 85, 86, 105–107	10k ohm ± 5%, 1/4W	234 024 087
R59	2.7k ohm ± 5%, 1/4W	234 024 073
R60	7.5k ohm ± 5%, 1/4W	234 024 084
R61	36 ohm ± 5%, 1/4W	234 024 028
R62	47k ohm ± 5%, 1/4W	234 024 103
R63	30k ohm ± 5%, 1/4W	234 024 098
R71	150k ohm ± 5%, 1/4W	234 024 115
R74, 78	470 ohm ± 5%, 1/4W	234 024 055
R76, 77	4.7 ohm ± 5%, 1/2W	234 014 060
R80, 81	20k ohm ± 5%, 8W	234 000 017
R82, 83	.1 ohm ± 3%, 3W	234 028 001
R87	680 ohm ± 5%, 1/4W	234 024 059
R88–95	TRIMPOT, 10k ohm	236 200 079
R97, 98, 101, 103	51 ohm ± 5%, 1/4W	234 024 032
R112, 113	1.2k ohm ± 5%, 1/2W	234 014 041

CAPACITORS

C1, 6, 7, 11 18, 22–25, 35, 45, 47–49	1.0 µf ± 20%, 50V	204 118 014
C2	.015 µf ± 10%, 500V	204 085 012
C3	.012 µf ± 10%, 500V	204 085 010
C4, 8	1500 pf ± 10%, 1000V	204 079 059
C5, 9	100 pf ± 15%, 100V	204 200 013
C10, 15, 16, 33, 34, 39, 40, 42	0.1 µf ± 20%, 50V	204 118 007
C12	33 pf ± 10%, 600V	204 200 007
C13	47 pf ± 15%, 100V	204 200 009
C14, C19	.033 µf ± 20%, 50V	204 118 004
C17	1000 pf ± 15%, 100V	204 200 025
C20	2200 pf ± 5%, 500V	204 105 034
C26, 28	1000 µf ± 20%, 200V	204 500 103
C27	1500 pf ± 5%, 500V	204 105 030
C29	1µf ± 10%, 250V	204 400 138
C30	1200 pf ± 5%, 200V	204 105 028
C31	6800 µf, +30 –10%, 25V	204 500 106
C32	4700 µf, +30 –10%, 35V	204 500 105
C36, 37	15 µf ± 10%, 220V	204 400 130
C38	2 µf, 400V	204 400 001
C43, 44	10 µf ± 10%, 20V	204 055 002

INTEGRATED CIRCUITS

U1	4050B	210 210 050
U2	ICL7660CPA	210 300 072
U3	LM306	210 016 002
U4	LM339AN	210 300 015
U5	4023B	210 210 023
U6	4011B	210 210 011
U7	SG3526	210 300 062
U8, 9	4066	210 200 022

TRANSISTORS

Q10, 12, 14, 15, 17, 18–21	VN10KM	239 200 012
Q16	2N3904	239 015 000
Q22, 25	2N2905A	239 019 000
Q23, 24	MM3724	239 052 000
Q30	IRF531	239 200 014
Q31	IRF9533	239 200 015

DIODES

CR1–5	MR826	239 066 005
CR6–8, 10–12, 14, 15	1N4148	239 014 000
CR9	1N751A	239 600 011
CR13	1N5233B	239 600 000

MISCELLANEOUS

T1, 2	TRANSFORMER, PULSE	251 200 024
T3	TRANSFORMER, PWR SWITCHING	251 200 029
T4	TRANSFORMER, OUTPUT	251 200 030
L1	INDUCTOR, CUT	251 100 077
L2	INDUCTOR, .75mH, #T–0403	251 039 000
F1	FUSE, 6 AMPS	215 005 039
K1	RELAY, 4 POLE	230 007 002

HEATSINK ASSY, RF OUT **202 701 282 C**

REFERENCE DESIGNATION	DESCRIPTION	VALLEYLAB PART NUMBER
R115	RES. 500 ohm ± 5%, 50W	234 003 008
Q1–4	TRANSISTOR BUZ80A	239 200 020

HEATSINK ASSY, CLAMP **202 701 283 C**

REFERENCE DESIGNATION	DESCRIPTION	VALLEYLAB PART NUMBER
R1	RES. 50 ohm ± 5%, 50W	234 003 007
Q5–9	TRANSISTOR BUZ80A	239 200 020

HEATSINK ASSY, P.S. **202 701 069 H**

REFERENCE DESIGNATION	DESCRIPTION	VALLEYLAB PART NUMBER
R2	RES. 50 ohm ± 5%, 5W	234 003 007
Q26–29	POWER FET SGS	239 200 018
BR2	BRIDGE RECT. MDA3504	239 700 003

HEATSINK ASSY, LVPS **202 701 331 A**

REFERENCE DESIGNATION	DESCRIPTION	VALLEYLAB PART NUMBER
R1	RES. 50 ohm ± 3%, 50W	234 003 005
C1– 4	CAP. 1.0 µf ± 20%, 50V	204 118 014
C5	.0022 µf ± 20%, 6kV	204 025 044
U1	VOLT. REG. LM340K–5.0	210 300 073
U2	VOLT. REG. LM340K–12	210 300 074
BR1	BRIDGE RECT. VK648X	239 700 034
BR3, 4	BRIDGE RECT. VS247	239 006 000

SECTION 15
LIMITED WARRANTY

Valleylab, Inc. warrants each product manufactured by it to be free from defects in material and workmanship under normal use and service for the period(s) set forth below. Valleylab's obligation under this warranty is limited to the repair or replacement, at its sole option, of any product, or part thereof, which has been returned to it or its Distributor within the applicable time period shown below after shipment of the product to the original purchaser, and which examination discloses, to Valleylab's satisfaction, that the product is defective. This warranty does not apply to any product, or part thereof, which has been repaired or altered outside of Valleylab's factory in a way so as, in Valleylab's judgment, to affect its stability or reliability, or which has been subjected to misuse, negligence or accident.

The warranty periods for Manufacturer's products are as follows:

ELECTROSURGICAL GENERATORS	One Year from date of shipment.
Mounting Fixtures (all models)	One Year from date of shipment.
Footswitches (all models)	One Year from date of shipment.
Return Electrodes	Shelf life only, as stated on packaging.
Sterile Disposables	Sterility only, as stated on packaging.

THIS WARRANTY IS IN LIEU OF ALL OTHER WARRANTIES, EXPRESS OR IMPLIED, INCLUDING THE WARRANTIES OF MERCHANTABILITY AND FITNESS, AND OF ALL OTHER OBLIGATIONS OR LIABILITIES ON THE PART OF VALLEYLAB. VALLEYLAB NEITHER ASSUMES NOR AUTHORIZES ANY OTHER PERSON TO ASSUME FOR IT ANY OTHER LIABILITY IN CONNECTION WITH THE SALE OR USE OF ANY OF VALLEYLAB'S PRODUCTS. THERE ARE NO WARRANTIES WHICH EXTEND BEYOND THE TERMS HEREOF.

This warranty and the rights and obligations hereunder shall be construed under and governed by the laws of the State of Colorado, U.S.A.

Valleylab, Inc., its dealers and representatives, reserve the right to make changes in equipment built and/or sold by them at any time without incurring any obligation to make the same or similar changes on equipment previously built and/or sold by them.